KINCROME
PROFESSIONAL QUALITY TOOLS ®

HIGH PRESSURE WASHER
OPERATION MANUAL

K16202

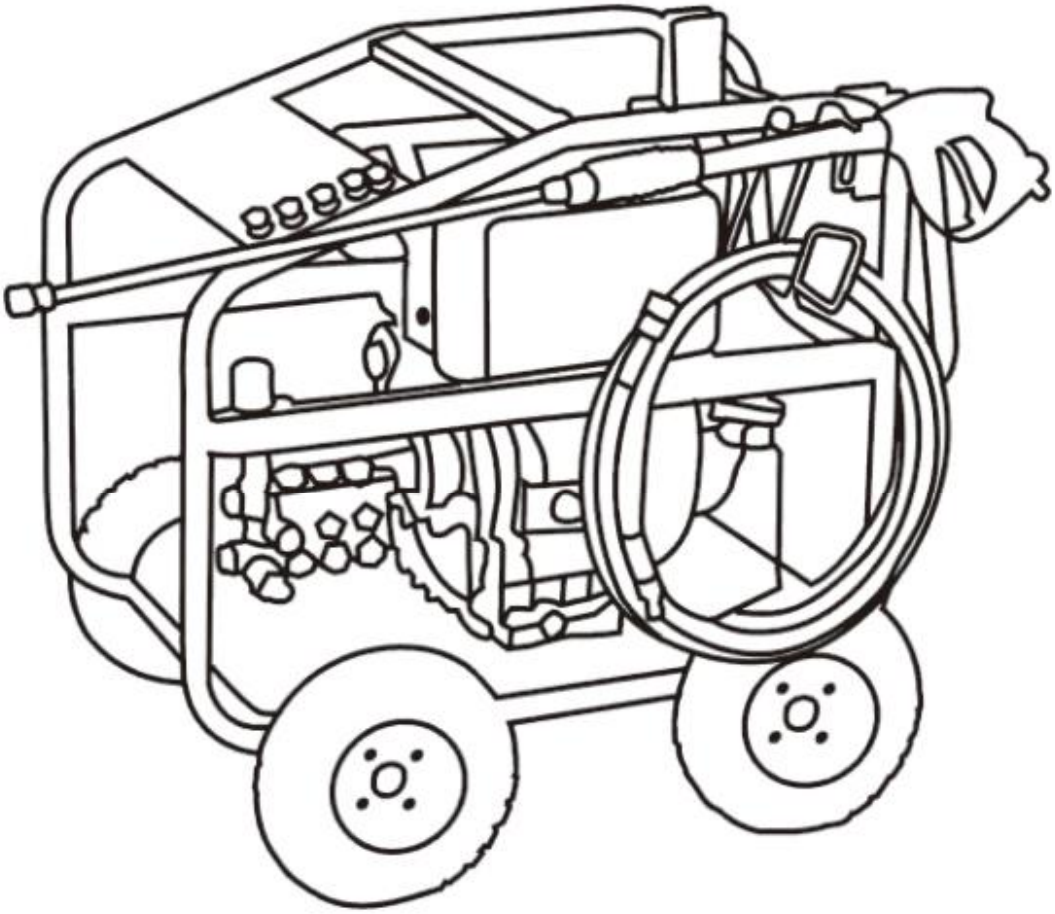

WARNING **This manual must be read before beginning installation of the unit.**

TABLE OF CONTENTS

SAFETY GUIDELINES /DEFINITIONS

This manual contains information that is important for you to know and understand. This information relates to protecting YOUR SAFETY and PREVENTING EQUIPMENT PROBLEMS. Please read the manual and attend to these sections.

!DANGER **indicates an imminent hazardous situation which, if not avoided, will result in death or serious injury.**

!WARNING **indicates a potentially hazardous situation which, if not avoided, could result in death or serious injury.**

!CAUTION **indicates a potentially hazardous situation which, if not avoided, may result in minor or moderate injury.**

!NOTE **used without the safety alert symbol indicating potentially hazardous situation which, if not avoid, may result in property damage.**

IMPORTANT SAFETY INSTRUCTIONS

!WARNING Do not operate equipment until you have read operation manual for safety assembly, operation, and maintenance instructions.

! DANGER RISK OF EXPLOSION OR FIRE	Hazard  
WHAT CAN HAPPEN	**HOW TO PREVENT IT**
• Spilled diesel and it's vapors can become ignited from cigarette sparks, electrical arcing, exhaust gases, and hot engine components such as the exhaust.	• Shut off engine and allow it to cool before adding fuel to the tank. • Use care in filling tank to avoid spilling fuel. • Move washer pump away from fueling area before starting engine.
• Heat will expand fuel in the tank which could result in spillage and possible fire explosion.	• Keep maximum fuel level 10mm below top of tank to allow for expansion.
• Operating the washer pump in an explosive environment could result in a fire.	• Operate and fuel equipment in well ventilated zones free from obstructions. Equip zone with fire extinguisher suitable for gasoline fires.
• Materials placed against or near the washer pump can interfere with its proper ventilation causing overheating and possible ignition of the materials.	• Never operate washer pump in an area containing flammable materials.
• Silencer exhaust heat can damage painted surfaces, melt any material sensitive to heat (such as siding, plastic, rubber, or vinyl) and damage live plants.	• Always keep washer pump a minimum of three metres away from surfaces (such as houses, automobiles, or live plants) that could be damaged from muffler exhaust heat.
• Improperly stored fuel could lead to accidental ignition. Improperly secured fuel could get into the hands of children or other unqualified persons.	• Store fuel in an approved container in a secure location away from work area.
• Use of acids, toxic or corrosive chemicals, poisons, insecticides, or any kind of flammable solvent with this product could result in serious injury or death.	• Do not spray flammable liquids.

Hazard	
! DANGER RISK TO BREATHING	
WHAT CAN HAPPEN	**HOW TO PREVENT IT**
• Breathing exhaust fumes will cause serious injury even death!	• Operate washer pump in a well ventilated area.
• Some cleaning fluids contain substances that could cause injury to skin, eyes, or lungs.	• Use only cleaning fluids specifically recommended for washer pump. Follow manufactures recommendations. do not use chlorine bleach or any other corrosive compound.

Hazard	
! DANGER RISK OF INJURY OR PROPERTY DAMAGE WHEN TRANSPORTING OR STORING	
WHAT CAN HAPPEN	**HOW TO PREVENT IT**
• Fuel or oil can leak or spill and could result in fire or breathing hazard, serious injury or death. Fuel or oil leaks will damage carpet, paint or other surfaces in vehicles or trailers.	• If washer pump is equipped with a fuel shut-off valve, turn the valve to the off position before transportation to avoid fuel leaks. If washer pump is not equipped with a fuel shut-off valve, drain the fuel from tank before transportation, only transport fuel in an approved container, always place washer pump on a protective mat when transporting to protect against damage to vehicle from leaks. Remove washer pump from vehicle immediately upon arrival at your destination.

Hazard	
! DANGER RISK OF HOT SURFACES	
WHAT CAN HAPPEN	**HOW TO PREVENT IT**
• Contact with hot surfaces, such as engines exhaust components, could result in serious burn.	• During operation, touch only the control surfaces of the washer pump. Keep children away from the washer pump at all times.

Hazard	
! DANGER RISK OF **FLUID** INJECTION	
WHAT CAN HAPPEN	**HOW TO PREVENT IT**
• Your washer operates at fluid pressures and velocities high enough to penetrate human and animal flesh, which could result in amputation or other serious injury. Leaks caused by loose fittings or damaged hoses can result in injection injuries, DO NOT TREAT FLUID INJECTION AS A SIMPLE CUT! See a physician immediately!	• Never place hands in front of nozzle. • Direct spray away from self or others. • Make sure hose and fittings are tightened and in good condition. Never hold onto the hose or fittings during operation. • Do not allow hose to contact exhaust. • Never attach or remove lance or hose fittings while system is pressurized.
• Injuries can result if system pressure is not reduced before attempting maintenance or disassembly.	• To relieve system pressure, shut off engine, turn off water supply, and pull gun trigger until water stops flowing. • Use only hose and accessories rated for pressure higher than your washer pump's PSI.

Hazard	
! DANGER RISK OF INJURY FROM SPRAY	
WHAT CAN HAPPEN	**HOW TO PREVENT IT**
• High velocity fluid spray can cause objects to break, propelling particles at high speed. • Light or unsecured objects can become hazardous projectiles.	• Always wear approved safety glasses. • Wear protective clothing to protect against accidental spraying. • Never point lance at people or animals. • Always secure trigger lock when lance is not in service to prevent accidental operation. • Never permanently secure trigger in open position.

Hazard	
!DANGER RISK OF CHEMICAL BURN	
WHAT CAN HAPPEN	**HOW TO PREVENT IT**
• Use of acids toxic or corrosive chemicals, poisons, insecticides, or any kind of flammable solvent with this product is not permitted, and could result in serious injury or death.	• Do not use acids, **petrol**, kerosene, or any other flammable materials in this product. Use only detergents,cleaners and degreasers recommended for use in washer pump. • Wear protective clothing to protect eyes and skin from contact with sprayed materials.

Hazard DANGER RISK OF UNSAFE OPERATION	
WHAT CAN HAPPEN	**HOW TO PREVENT IT**
• Unsafe operation of your washer pump could lead to serious injury or death to you or others.	• Do not use chlorine bleach or any other corrosive compound. • Become familiar with the operation and controls of the washer pump. • Keep operating area clear of all persons, pets and obstacles. • Do not operate the product when fatigued or under the influence of alcohol or drugs. Stay alert at all times. • Never defeat the safety features of this product. • Do not operate machine with missing, broken, or unauthorized parts. • Never leave lance unattended while unit is running.
• If proper starting procedure is not followed, engine can kickback , causing serious hand and arm injury.	• If engine does not start after two pulls, squeeze trigger of gun to relieve pump pressure, pull starter cord slowly until resistance is felt. Then pull cord rapidly to avoid kickback and prevent hand or arm injury.
• The gun/lance is a powerful cleaning tool that could look like a toy to a child.	• Keep children away from the washer pump at all times.
• Reactive force of spray will cause gun/wand to move, and could cause the operator to slip or fall, or misdirect the spray. Improper control of gun/ lance can result in injury to self and others.	• Do not overreach or stand on an unstable support. Grip gun/lance firmly with both hands. Expect the gun to kick when triggered.

Hazard DANGER RISK OF ELECTRICAL SHOCK	
WHAT CAN HAPPEN	HOW TO PREVENT IT
• Spray directed at electrical outlets or switches. or objects connected to an electrical circuit, could result in a fatal electrical shock.	• Unplug any electrically operated product before attempting to clean it. Direct spray away from electric outlets and switches.

SAFETY SYMBOL	INSTRUCTION
	This manual must be read before beginning installation of the unit.
	High pressure water jets are potentially dangerous if used incorrectly. In particular, do not direct the water jet towards people or animals, electrical equipment or the unit itself.

CARTON CONTENTS

READ THIS OWNER'S MANUAL AND SAFETY RULES BEFORE OPERATING YOUR UNIT.

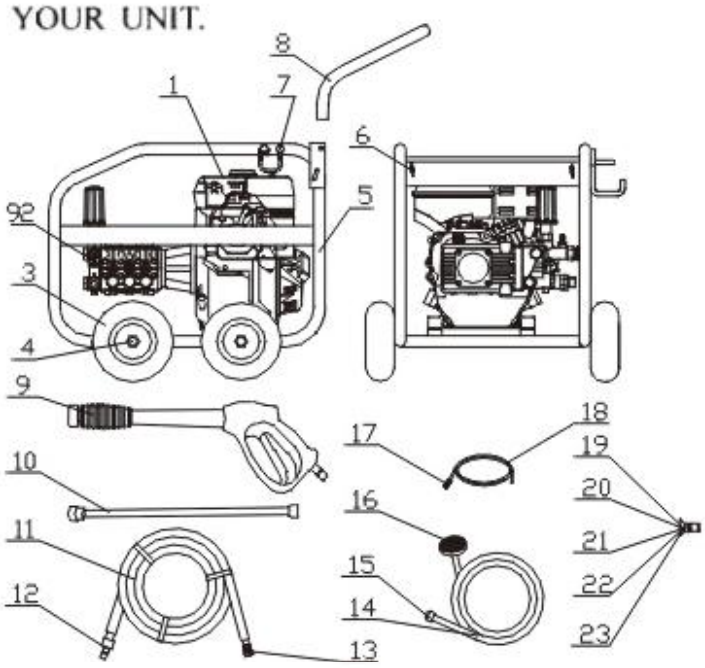

No.	Kincrome Part Number	Description	Qty
1	K16202-1	Engine	1
2	K16202-92	Pump	1
3	K16202-3	Wheel	1
4	K16202-4	Hub Cap	1
5	K16202-5	Carrier	1
6	K16202-6	Handle Spring	2
7	K16202-7	Vinyl Round Cap	1
8	K16202-8	Handle	1
9	K16202-9	Gun Assy.	1
10	K16202-10	Assy. Wand &Quick Connect	1
11	K16202-11	High Pressure Water Hose	1
12	K16202-12	Plated Steel Quick Connect 3/8	1
13	K16202-13	Brass Quick Connect 3/8	1
14	K16202-14	Inlet Hose	1
15	K16202-15	Inlet Hose Adaptor	1
16	K16202-16	Filter	1
17	K16202-17	Chemical Filter	1
18	K16202-18	Chemical Hose	1
19	K16202-19	Nozzle Black	1
20	K16202-20	Nozzle White	1
21	K16202-21	Nozzle Green	1
22	K16202-22	Nozzle Yellow	1
23	K16202-23	Nozzle Red	1

SPECIFICATIONS

Model	K16202
Max.Pressure (PSI / bar)	3200 / 224
Flow (GPM / L/min)	3.0 / 11.3
R.P.M.	3000
Power	11HP
Displacement (cc)	406
Fuel capacity (L)	5.5
GrossWeight (kg)	104
Dimension (cm)	77×51.5×68

ASSEMBLY INSTRUCTIONS

1.Attach high pressure water hose to gun. Tighten securely.

2.Connect lance to gun. Screw tight securely.

3.Assemble the quick-connect nozzle as described in the instructions supplied.

4.Add engine oil to engine (15W/40) . Refer to engine owners manual supplied by engine manufacturer for correct procedure.

NOTE There will be a slight amount of oil in the engine from factory testing.

5. Install oil inlet plug into pump, tighten securely.
Check oil drain plug into pump, tighten securely.

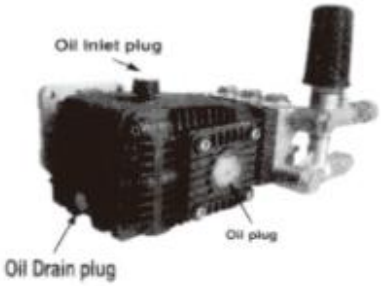

BASIC ELEMENTS OF A WASHER PUMP

Washer Pump: Increases the pressure of the water supply.

Engine: Drives the washer pump.

High Pressure Water Hose: Carries the pressurized water from the pump to the gun and lance.

Gun: Connects with lance to control water flow rate, direction, and pressure.

Lance: Lance is equipped with a female quick-fix on the end. This allows the user to quickly change the nozzle for different spray patterns and change to the soap nozzle for the low pressure and chemical /soap applications.See how to use lance paragraph in this section.

Chemical Hose: Feeds cleaning agents into the pump to mix with the pressurized water. See how to apply chemical /cleaning agent in this section of this manual.

BASIC ELEMENTS OF ENGINE

Refer to the engine manual for location and operation of engine controls.

Control Lever: Controls engine speed.

Starter Grip: Pulling starter grip operates recoil starter to crank engine.

Key Start: Turn key to start position & release.

Fuel Valve Lever: Opens\ Closes connection between fuel tank and carburetor.

Engine Switch: Enables and disables ignition system.

WASHER PUMP TERMINOLOGY

PSI: Pounds per square inch. the unit of measurement for water pressure.

LPM: Litre per minute, the unit of measurement for the flow rate of water.

Bypass Mode: In bypass mode, the pump is recirculating water because the trigger of the spray gun is not pulled. If the unit is left in the bypass mode for more than two (2) minutes, the water temperature will rise to a dangerous level and could damage internal components of the pump. Any damage to pump due to these causes will not be covered under warranty.

! CAUTION **Do not allow the unit to operate in bypass mode for more than two minutes at any time. Overheating of pump can cause damage to pump.**

Chemical Injection System: Mixes soap or cleaning agents with the pressurized water to improve cleaning effectiveness.

Water Supply: All pressure washers must have a source of water. the minimum requirements for a water supply are 20 PSI and 19 Litre per minute (19L/min)

PUMP OPERATING FEATURES

PRESSURE REGULATOR

The pressure setting is preset at the factory to achieve optimum pressure and cleaning. If you need to lower the pressure, it can be accomplished by these methods

1. **Back away from the surface to be cleaned .**The further away you are, the less the pressure will be on the surface to be cleaned

! CAUTION **Do not attempt to increase pump pressure. A higher pressure setting than the factory set pressure may damage the pump.**

2. **Reduce the speed the of diesel engine (RPM).** Slow the engine revs down and the water pressure will go down with it.
3. **Change to the 40^0 white nozzle,** This nozzle delivers a less powerful stream of water and a wider spray pattern.
4. **Adjust the pressure regulator on the pump.** Turn the pressure regulator knob anti-clockwise to lower the pressure. Once you have finished using your pressure washer, return the pressure regulator to its original position by turning it clockwise.

! CAUTION Do not try to turn pressure regulator knob past the built-in stop or damage to the pump will result.

TYPES OF NOZZLE

Your washer pump is equipped with up to five spray nozzles. Each nozzle is colur coded, and delivers a specific spray pattern for a particular cleaning purpose. The size of the nozzle determines the size of the fan spray and the pressure out of the nozzle. The **0°**, **15°**, **25°**, and **40°** nozzles are all high pressure nozzles, where as the chemical nozzle 84° is a low pressure nozzle.
The nozzles are housed in receptacles on the panel of the washer pump handle. Colors on the panel identify nozzle location and spray pattern.

!WARNING Risk of injection or injury to person. Do not direct discharge stream toward persons, unprotectesd skin, eyes, pets or any animals. Serious injury can occur.

CHANGING NOZZLES

!CAUTION DO NOT attempt to change the nozzles while the washer pump is running. Turn the engine or gun OFF before changing nozzles.

1. Pull quick-fix back and insert nozzle.
2. Release quick-fix and twist nozzle to make sure it is secure in quick-fix socket.

!WARNING Risk of injury. Ensure nozzle is completely inserted in quick-fix socket before squeezing gun trigger.

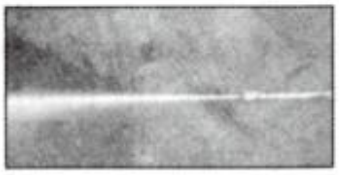

0° nozzle-red. This nozzle delivers a pinpoint stream and is extremely powerful. It covers a very small area of cleaning. This nozzle should only be used on surface that can withstand this high pressure such as metal or concrete. Do not use on wood.

15°nozzle-yellow. This nozzle delivers a powerful 15 degree spray pattern for intense cleaning of small areas. This nozzle should only be used on areas that can withstand the high pressure from this nozzle.

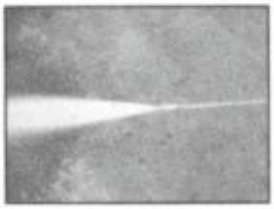

25°nozzle-green. This nozzle delivers a 25 degree spray pattern for intense cleaning of larger areas. This nozzle should only be used on areas that can withstand the pressure from this nozzle.

40° nozzle-white. This nozzle delivers a 40 degree spray pattern and a less powerful stream of water. It covers a wide area of cleaning, this nozzle can be used for most general cleaning jobs.

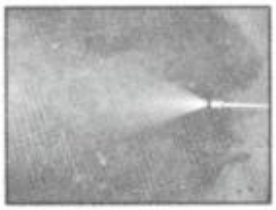

Chemical nozzle-black. This nozzle is used to apply chemicals or cleaning solutions . It has the least powerful stream.

HOW TO APPLY CHEMICALS AND CLEANING AGENTS

!WARNING **Applying chemicals or cleaning agents is a low pressure operation.**

!NOTE Use only soaps and chemicals designed for washer pump use. **Do not use bleach.**

To apply chemicals:

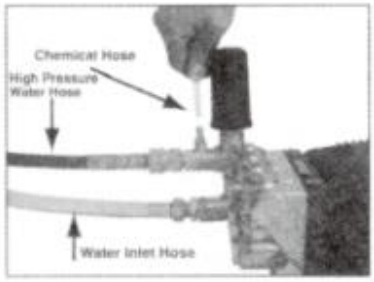

1. **Press chemical hose** onto barbed fitting located near high pressure water hose connection of pump as shown.
2. **Place other end** of chemical hose with filter on into a container holding chemical/cleaning solution.

   !NOTE The chemical/water ratio is 1:7, for every 7 **litres** of water pumped, 1 **litre** of chemical/ cleaning solution will be used.
3. **Install low pressure (black) nozzle** into quick-fix of lance, see CHANGING NOZZLES paragraph in this section.

4. **After use of chemicals,** place chemical hose into a container of clean water and draw clean water through the chemical injection system to rinse system thoroughly. If chemicals remain in the pump it could be damaged. Pumps damaged due to chemicals will not be covered under warranty.

!NOTE Chemicals and soaps will not siphon when lance is in the high pressure setting.

READ AND UNDERSTAND ALL WARNINGS BEFORE STARTING UNIT

!DANGER **When using the high pressure setting, DO NOT** allow the high pressure spray to come into contact with unprotected skin, eyes, pets or animals. Serious injury can occur.

Your washer operates at fluid pressures and velocities high enough to penetrate human and animal flesh, which could result in amputation or other serious injury. Leaks caused by loose fittings or worn or damaged hoses can result in injection injuries. **DO NOT TREAT FLUID INJECTION AS A SIMPLE CUT! See a Doctor immediately!**

!WARNING **NEVER** fill fuel tank when engine is running or hot. Do not smoke when filling the fuel tank.

NEVER fill the fuel tank completely. Fill tank to 10mm below the bottom of the filler neck to provide space for fuel expansion. Wipe any fuel spillage from the engine and equipment before starting the engine.

NEVER run the engine indoors or in an enclosed, poorly ventilated area. Engine exhaust contains carbon monoxide, an odorless and deadly gas.

DO NOT let hoses come into contact with very hot engine exhaustduring or immediately after use of your washer pump. Damage to hoses from contact with the hot engine surfaces will NOT be covered by warranty .

!CAUTION **NEVER** pull the water supply hose to move the washer pump. This could damage the hose and pump inlet.

DO NOT use hot water, use cold water only.

NEVER turn the water supply off while the washer engine is running or damage to the pump will result.

DO NOT stop spraying water for more than two minutes at a time. Pump operates in a bypass mode when the spray gun trigger is not pressed. If the pump is left in the bypass mode for more than two minutes, internal components of the pump can be damaged.

STARTING

Prior to starting, refer to your engine manual for proper starting procedures for your engine type.

1. **In a well ventilated outdoor area** add fresh, high quality, diesel. Do not overfill. Wipe up spilled fuel before starting the engine. Refer to Engine Owners Manual for correct procedure.
2. **Check engine oil level.** See Engine Owners Manual for correct procedure.

   !NOTE **There will only be a slight amount of oil in the engine from factory testing.**
3. **Check the water filter screen** is in water inlet of pump.

   !NOTE Cone side faces out.

4. **Connect** water source to pump inlet.

   !NOTE Water source must provide a minimum of 5 gallons per minute at 20 PSI (19L/min).
5. **Connect** high pressure water hose to pump outlet.
6. **If applying a chemical or cleaning solution,** see How To Apply Chemicals/Cleaning Agents in Operation section of this manual.
7. **Turn water source on.**

   !NOTE Failure to do so could cause damage to the pump.

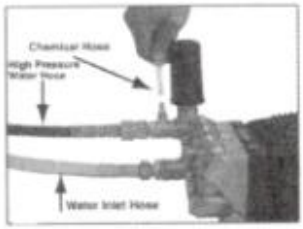

8. **Start engine.**Turn STOP/RUN level to RUN. Pull trigger gun to relieve pressure.Turn key switch to start & release. If battrey flat - use pull start to over-ride (Ensure key switch is turned to ON).
9. **Depress trigger on gun to start water flow.**

   !NOTE **Stand on a stable surface** and grip gun with both hands. Expect the gun to kick when triggered.
10. **Release trigger to stop water flow.**
11. **Adjust spray for the task** being performed by changing quick-fix nozzle.See CHANGING NOZZLES instructions in this section.

SHUTTING DOWN

1. **After each use,** if you have applied chemicals, place chemical hose into container of clean water and draw clean water through the chemical injection system to rinse the system thoroughly.

   !NOTE Failure to do so could cause damage to the pump.
2. **Turn engine off.** See engine owner's manual.

   !NOTE NEVER turn the water off with the engine running.
3. **Turn water source off.**
4. **Pull trigger on the spray gun** to relieve any water pressure in hose or gun.
5. **See storage section** in this manual for proper storage procedures.

MAINTENANCE

It is recommended that all engine maintenance & servicing be carried out ONLY by a trained diesel fitter.

!WARNING **When performing maintenance, you may be exposed to hot surfaces, water pressure, or moving parts that can cause serious injury or death!**

Before performing any maintenance or repair, let engine cool and release all water pressure. The engine contains flammable fuel. DO NOT smoke or work near open flames while performing maintenance.

To ensure efficient operation and longer life of your washer pump,the routine maintenance schedule should be prepared and followed. If the washer pump is used in unusual conditions, such as high-temperature or dusty conditions, more frequent maintenance checks will be required

Recommended Service Intervals:

Each Day - Check pump & engine oil, check for leaks.
50 hours - Change pump & engine oil.
300 hours - Engine service required, pump service reguired, Contact your local dealer.
Every 300 hours thereafter ..... as above.

ENGINE

Consult the Engine Owners Manual for the manufacturer's recommendations for any and all maintenance.

CHANGING OIL INLET PLUG

⚠ CAUTION The red plug on the pump is specially desiged for transportation, before using the unit, please replace the red plug with the yellow plug or the brass plug in the spare parts package.

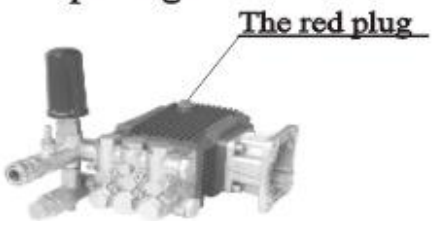

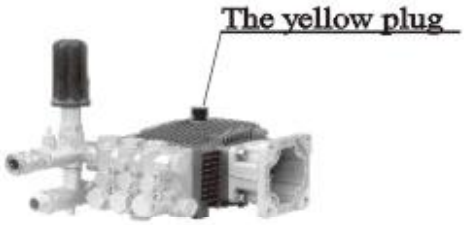

TO CHECK OIL

1. Remove oil inlet plug from pump and wipe clean.
2. Insert oil inlet plug fully into pump, then remove it.
3. Oil level is correct when oil covers the lower 1/2 inch of end of oil inlet plug.

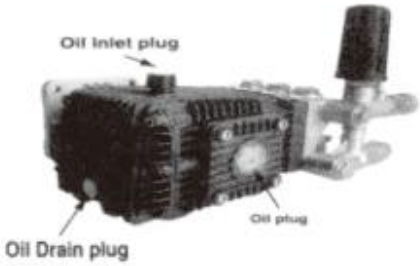

HOW TO CHANGE PUMP OIL

1. Loosen oil inlet plug.
2. Place a container under the oil drain plug.
3. Remove oil drain plug.
4. After oil is drained replace oil drain plug and tighten securely.
5. Remove oil inlet plug and fill with recommended oil, see the pump oil chart for the correct amount and type of oil.
6. Replace oil inlet plug and tighten securely.

Oil type: SAE 15W-40 or equivalent motor oil.

Type	K16202
Oil capacity (ml)	530±5

SPRAY WAND

If the nozzle becomes clogged with foreign materials such as dirt, excessive pressure may develop. If the nozzle becomes partially clogged or restricted, the pump pressure will pulsate. Clean the nozzle immediately using the nozzle kit supplied and the following instructions:

1. Shut off the washer pump and turn off the water supply.
2. Pull trigger on the gun to relieve any water pressure.
3. Disconnect the lance from the gun.
4. Remove the nozzle from the lance. Remove any obstructions with the nozzle cleaning tool provided and backflush with clean water.
5. Direct water supply into the spray wand end to backflush loosened particles for 30 seconds.

6. Reassemble the nozzle to the lance, ensuring the quick-fix is secure.
7. Reconnect lance to gun and turn on water supply.
8. Start washer pump and place lance into high pressure setting to test.

HOW TO CLEAN THE WATER INLET FILTER

This screen filter should be checked periodically and cleaned if necessary.

1. **Remove the filter** by grasping the end and removing it. from the water inlet of pump as shown.
2. **Clean filter** by flushing it with water on both sides.
3. **Re-insert filter** into the water inlet of pump.

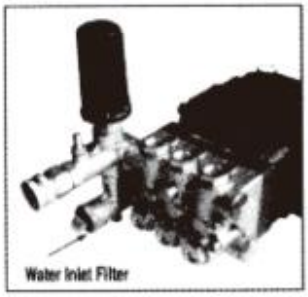

!NOTE Cone side faces out.

!NOTE Do not operate pressure washer without the filter properly installed.

STORAGE

ENGINE

Consult the owners manual for the manufacturer's recommendations for storage.

PUMP

1. **Drain all water from the high pressure water hose**, coil it up, and store it in the cradle on the washer.

2. **Drain all water from the gun** and lance by holding the gun in a vertical position with the nozzle end pointing up and squeezing trigger. Store in gun/hose holder.

3. **Store chemical hose** and high pressure water hose, so they are protected from damage, such as being run over.

It is recommended that you follow these steps to protect the internal seals of the washer pump when STORING THE UNIT FOR MORE THAN 30 DAYS AND/OR WHEN FREEZING TEMPERATURES ARE EXPECTED

PROTECT FROM FROST

1. **Obtain a funnel, 1 litre** of antifreeze, and approximately **1 metre** of garden hose with a male hose connector attached to one end.

2. **Connect 1metre length of hose** to water inlet of pump.

3. **Add antifreeze** to hose.

4. **Turn engine ON and switch off** as soon as antifreeze comes out of high pressure water hose connection of pump.

5. **Remove short hose** from water inlet of pump.

K16202-92 PUMP DIAGRAM

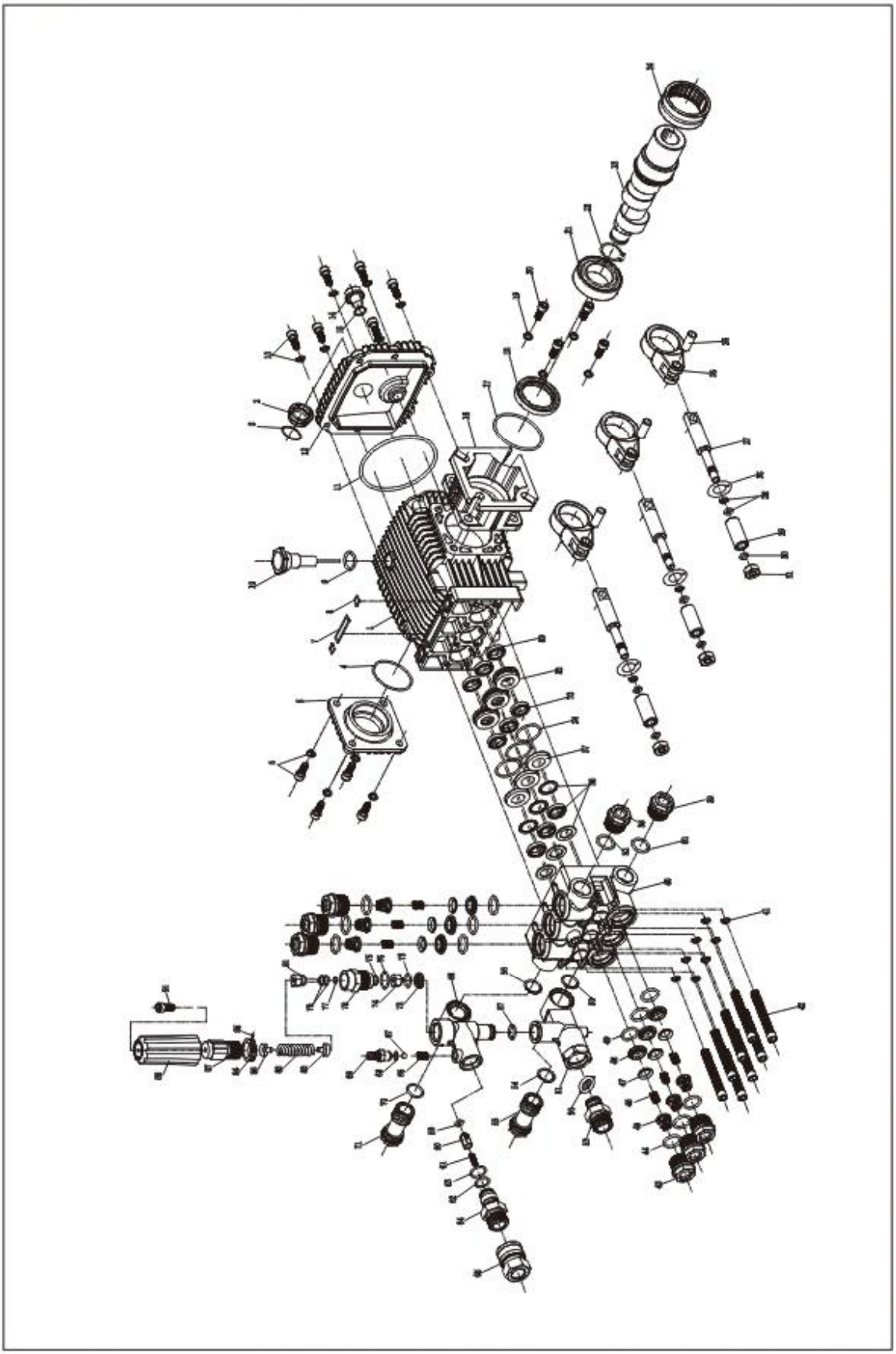

No.	Kincrome Part Number	Description	Qty	No.	Kincrome Part Number	Description	Qty	No.	Kincrome Part Number	Description	Qty
1	K16202-92-1	Crank Case	1	33	K16202-92-33	Water seal	3	65	K16202-92-65	Outlet QC Connector	1
2	K16202-92-2	Oil Gauge	1	34	K16202-92-34	O ring	3	66	K16202-92-66	Spring	1
3	K16202-92-3	O Ring, Oil Gauge	1	35	K16202-92-35	Check ring	3	67	K16202-92-67	Ball	1
4	K16202-92-4	O Ring	1	36	K16202-92-36	Water seal	3	68	K16202-92-68	O Ring	1
5	K16202-92-5	Cover, Crankshaft	1	37	K16202-92-37	Backup ring	3	69	K16202-92-69	Soap Suction Nozzle	1
6	K16202-92-6	Screw & Gasket	4	38	K16202-92-38	G3/8 outlet plug	1	70	K16202-92-70	O Ring	1
7	K16202-92-7	Sticker 1	1	39	K16202-92-39	G1/2 inlet plug	1	71	K16202-92-71	Outlet Connector	1
8	K16202-92-8	Sticker 2	2	40	K16202-92-40	Manifold head	1	72	K16202-92-72	Seat	1
9	K16202-92-9	O ring	1	41	K16202-92-41	Washer	8	73	K16202-92-73	O Ring	1
10	K16202-92-10	Oil plug	1	42	K16202-92-42	Bolt	8	74	K16202-92-74	Bullet	1
11	K16202-92-11	O ring	1	43	K16202-92-43	Valve cage	6	75	K16202-92-75	O Ring	1
12	K16202-92-12	rear cover	1	44	K16202-92-44	Valve O Ring	6	76	K16202-92-76	O Ring	1
13	K16202-92-13	Screw & Gasket	4	45	K16202-92-45	Valve cage	6	77	K16202-92-77	O Ring	1
14	K16202-92-14	Drain plug	1	46	K16202-92-46	Valve Spring	6	78	K16202-92-78	Valve Body	1
15	K16202-92-15	O ring	1	47	K16202-92-47	Valve Plate	6	79	K16202-92-79	O Ring	1
16	K16202-92-16	Flange	1	48	K16202-92-48	Valve Seat	6	80	K16202-92-80	O Ring	1
17	K16202-92-17	O ring	1	49	K16202-92-49	Valve O Ring	6	81	K16202-92-81	Adjusting Spindle	1
18	K16202-92-18	Oil seal	1	50	K16202-92-50	O Ring	1	82	K16202-92-82	Spring seat	1
19	K16202-92-19	Washer	4	51	K16202-92-51	Inlet T Connect	1	83	K16202-92-83	Spring	1
20	K16202-92-20	Screw	4	52	K16202-92-52	O Ring	1	84	K16202-92-84	Jam Nut	1
21	K16202-92-21	Bearing 6305	1	53	K16202-92-53	Adaptor	1	85	K16202-92-85	Fix Screw	1
22	K16202-92-22	Clip	1	54	K16202-92-54	O Ring	1	86	K16202-92-86	Spring seat	1
23	K16202-92-23	Crankshaft	1	55	K16202-92-55	Inlet Banjo Bolt	1	87	K16202-92-87	Knob	1
24	K16202-92-24	Needle Bearing	1	56	K16202-92-56	O Ring	1	88	K16202-92-88	Plastic cap, knob	1
25	K16202-92-25	Plunger pin	3	57	K16202-92-57	O Ring	1	89	K16202-92-89	Oil seal , plunger	1
26	K16202-92-26	connecting rod	3	58	K16202-92-58	Outlet T Connect	1	90	K16202-92-90	Strainer	1
27	K16202-92-27	Plunger guide	3	59	K16202-92-59	O Ring	1	91	K16202-92-91	Screw	1
28	K16202-92-28	Backup ring	3	60	K16202-92-60	Spindle	1	92	K16202-92	Pump Assembly	1
29	K16202-92-29	Ceramic plunger pipe	3	61	K16202-92-61	Spring	1				
30	K16202-92-30	Plunger washer	3	62	K16202-92-62	O Ring	1				
31	K16202-92-31	Fix nut	3	63	K16202-92-63	O Ring	1				
32	K16202-92-32	Compaction Ring	3	64	K16202-92-64	Adaptor	1				

TROUBLE SHOOTING GUIDE

PROBLEM	CAUSE	CORRECTION
Engine will not start (see Engine Manual for further engine troubleshooting)	No fuel.	Add fuel.
	Low oil.	Add required amount of oil.
	Pressure builds up after several tries or after initial use.	Squeeze gun trigger to relieve pressure.
	Engine STOP/RUN switch in STOP position.	Place engine STOP/RUN switch in STOP position.
	Battery wire not attached.	Attach Battery wire.
	Fuel valve closed.	Move fuel valve lever to the "open" position.
No or low pressure (initial use)	Lance not in high pressure.	See Types of nozzle paragraph in the operation section.
	Lower water supply.	Water supply must be at least 19 LPM.
	Leak at high pressure water hose fitting.	Tighten. Apply sealant tape if necessary.
	Nozzle obstructed.	See spray wand paragraph in the maintenance section for the correct procedure.
	Inlet water filter screen clogged.	Remove and clean filter.
	Air in hose.	Turn off the engine, then the water source. Disconnect the water source from the pump inlet and turn the water source on to remove all air from the hose. When there is a steady stream of water present, turn water source off. Re-connect water source to pump inlet and turn on water source. Squeeze trigger to remove remaining air.

TROUBLE SHOOTING GUIDE

PROBLEM	CAUSE	CORRECTION
No or low pressure (initial use)	Throttle control lever is not in the"RUN" position.	Move throttle control lever to the "RUN"position.
	High pressure water hose is too long.	Use high pressure water hose under 15 metres improve water flow.
Will not draw chemicals	Lance not in low pressure.	See"Types of Nozzle"paragraph in the operation section.
	Chemical filter clogged.	Clean filter.
	Chemical filter not in chemical.	Ensure end of chemical hose is fully submerged into chemical.
	Chemical too thick.	Dilute chemical. Chemical should be the same consistency as water.
	Pressure hose is too long.	Lengthen water supply hose instead of high pressure water hose.
	Chemical build up in chemical injector.	Have parts cleaned or replaced.
No or low pressure (after period of normal use)	Worn seal or packing.	Check and replace.
	Worn or obstructed valves.	Check and replace.
	Worn unloader piston.	Check and replace.
Water leaking at gun/lance connection	Worn or broken o-ring.	Check and replace.
	Loose hose connection.	Tighten.
Oil leaking at pump	Oil seals worn.	Check and replace.
	Loose oil drain plug.	Tighten.
	Worn oil drain plug o-ring.	Check and replace.
	Worn fill plug o-ring.	Check and replace.
	Pump overfilled.	Check for correct amount.
	Incorrect oil used.	Drain and fill with correct amount and type of oil.
	Vent plug is clogged	Clean vent plug; blow air through it to remove any blockage. If problem persists, replace plug.
Pump pulsates	Nozzle obstructed.	See Lance paragraph in the maintenance section for the correct procedure.
	Air in pump	Turn off engine, remove h.p. hose, turn on the water supply, start machine & bleed out air. Re-fot hose & test.

QUICK FACTS

DIESEL FUEL	Use fresh high quality diesel fuel.
OIL	Pump oil: refer to owners manual supplied with this unit. Engine oil: refer to engine manual supplied with his unit. Some units are equipped with a low oil sensor and adequate oil must be added or the unit will not start.
WATER	Use only cold water. Do not operate unit with clogged or missing water filter /screen. Do not operate unit without adequate water supply to pump. Adequate water supply is a minimum of 20 PSI and 20L/min.
PRESSURE ADJUSTMENT	The pressure setting is preset at the factory to achieve optimum cleaning. If you need to lower the pressure setting, refer to the operation manual for proper procedure.
PUMP	Pull gun trigger every 2 minutes while engine is running. Do not allow water to freeze in pump. For cold weather or long term storage refer to the operation manual for proper procedure.
BY-PASS MODE	NEVER leave unit running for more than 2 minutes without pulling gun trigger, doing so could cause damage to pump and void the warranty.
HOSE	Do not allow hoses to contact the hot engine muffler during or after use. Never pull the hose to move the unit.
ENGINE	Do not adjust or attempt maintenance without consulting engine manual or an authorized engine service center. Always turn on the water before starting the engine.
CHEMICALS/ SOAP	Use only soaps and chemicals designed for pressure washer use. Do not use solvents or caustic chemicals
NOZZLE	Keep nozzle unclogged. Refer to manual for cleaning procedures. Chemicals/soap cannot be applied in high pressure setting. Only in low setting.
MAINTENANCE SCHEDULE	Follow recommended maintenance schedule for engine & pump. Refer to manuals.
STORAGE OR WINTERIZING	Draw clean water through chemical inlet. Do not allow water to freeze in pump, gun, lance or hoses. For cold weather or long term storage refer to the operation manual for proper procedure.

DISPOSAL OF THE MACHINE

- If you decide not to use the machine anymore, it is recommended to remove the power supply cord.
- In any case it must be kept out of the reach of children.
- Being as the machine is a special waste, disassemble it and gather the homogeneous parts for disposal according to the applicable laws.
- Do not use the scrapped parts as spare parts.

ENVIRONMENTAL PROTECTION

Please arrange for the proper disposal of the packaging.

The packaging material can be recycled.

Please do not place the packaging into the ordinary refuse for disposal, but arrange for the proper recycling.

Please arrange for the proper disposal of the old appliance.

Old appliances contain valuable materials that can be recycled. Please arrange for the proper recycling of old appliances. Batteries, oil, and similar substances must not enter the environment. Please dispose of your old appliances using appropriate collection systems.

AIR-COOLED DIESEL

Owner's Manual

170F/170FE 178F/178FE
186F/*186FE

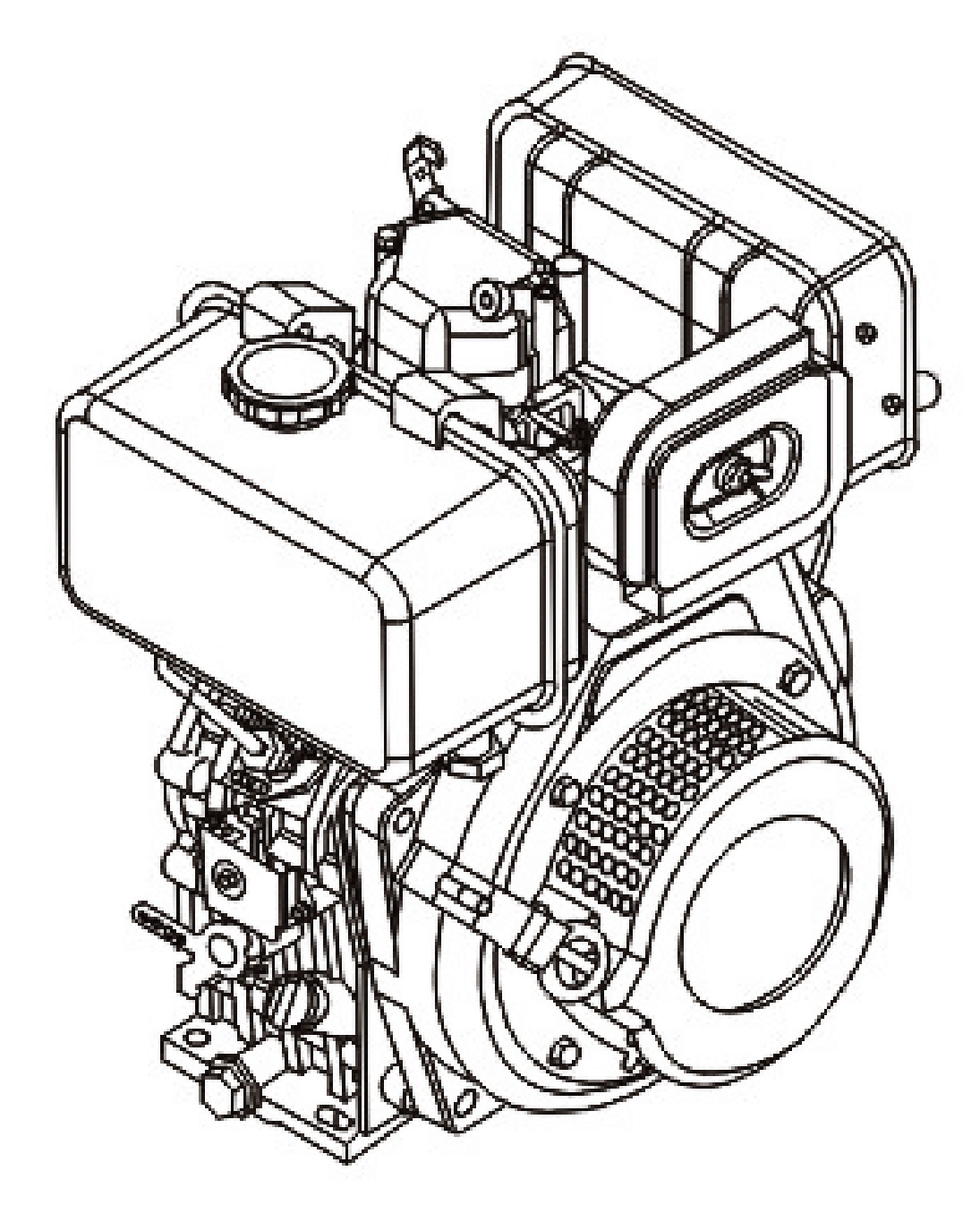

* 186FE-K16202

CONTENT

Please make sure to follow each precaution carefully

EXHAUST PRECAUTIONS

- Never inhale exhaust gas. It contains carbon monoxide, a colourless, odorless and extremely dangerous gas which can cause unconsciousness or death.
- Never operate the engine indoors or in a poorly ventilated area, such as a tunnel or cave, etc. if you do need to use the set indoor, an exhausting pipe is necessary in order to keep the harmful gas out of the room.
- Exercise extreme care when operating the engine near people or animals.
- Keep the exhaust pipe free of external objects.

REFUELLING PRECAUTIONS

- Be sure to stop the engine prior to refuelling.
- Do not overfill the fuel tank.
- If fuel is spilt, wipe it away carefully and wait until the fuel has dried before starting the engine.
- When refilling oil, make sure that the fuel cap is secure to prevent spillage.

FIRE PREVENTION

- Do not operate the engine while smoking or near an open flame.
- Do not use the engine around dry brush, twigs, cloth rags, or other flammable materials.
- Keep the engine at least 3 feet (1 meter) away from buildings or other structures.
- Keep the engine away from flammables and other hazardous materials (trash, rags, lubricants, explosives).
- When replacing the fuel or oil, a container is required and the afterwards treatment should be according to the local regulation.
- Some necessary equipment(e.g. ear cover) are required to protect operator from the noise as well as other harmfulness by the sets.

Installation Maintenance and transportation

- A screw on the top of engine is used for transportation.
- Main installation, maintenance must be operated by technician, because the engine structure is very complex.

PROTECTIVE COVER

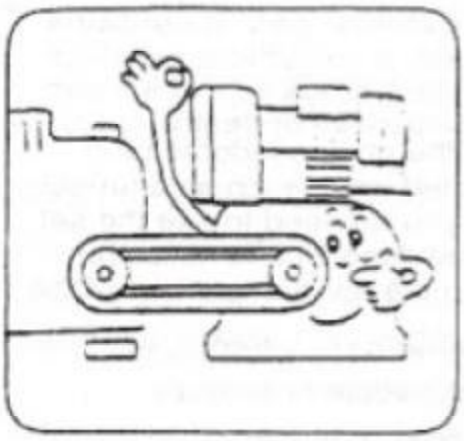

- **Place the protective covers over the rotating parts.**
  If rotating parts, such as the driving shaft, pulley, belt, etc., are left exposed, they are potentially hazardous.
  To prevent injury, equip them with protective covers or shrouds.
- **Be careful of hot parts.**
  The muffler and other engine parts become very hot while the engine is running or just after it has stopped. Touching with hands is forbidden.
  Operate the engine in a safe area and keep children away from the running engine.

SURROUNDINGS

- Operate the engine on a table, level surface free of small rocks, loose gravel, etc.
- Operate the engine on a level surface.
  If the engine is over tilted, fuel spillage may result.
  Be sure the oil is enough and pressure is normal

NOTE:

Operating the engine at a steep incline may cause seizure due to improper lubrication even with a maximum oil level.

- Be careful of fuel spillage when transporting the engine.
  Tighten the fuel tank cap securely and close the fuel strainer cock before transit.
- Do not move the engine while it is in operation.
- If the engine will be transported over a long distance or on rough roads, drain fuel off from fuel tank to prevent fuel leakage.

PRE-OPERATION CHECKS

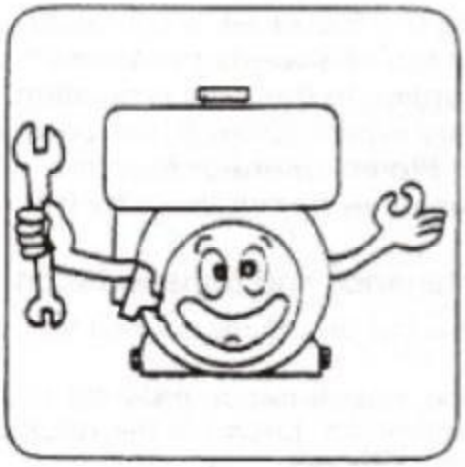

- Carefully check fuel pipes and joints for preventing looseness and fuel leakage.
  Leaked fuel creates a potentially dangerous situation
- Check bolts and nuts for looseness.
  A loose bolt or nut may cause serious engine trouble.
- Check the engine oil and refill if necessary.
- Check the fuel level and refill if necessary
  Take care not to overfill the tank.
- Wear snug fitting working clothes when operating the engine.
  Loose aprons, towels, belt, etc., may be caught in the engine or drive train causing a dangerous situation.

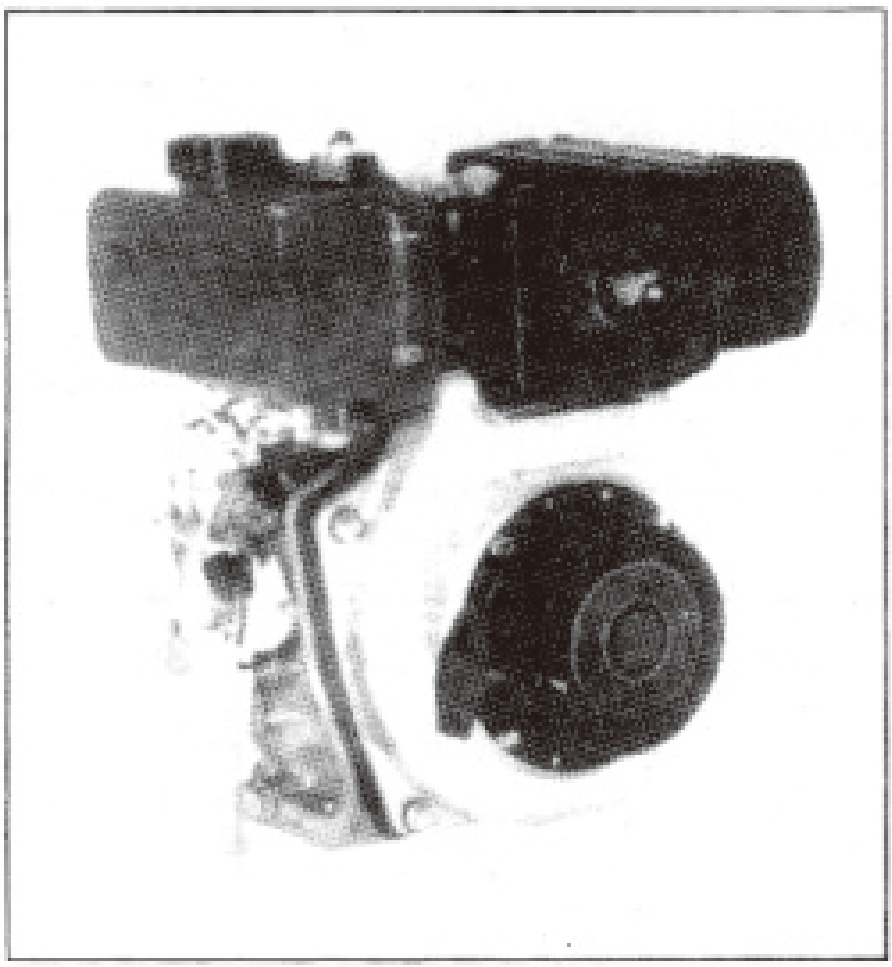

Front

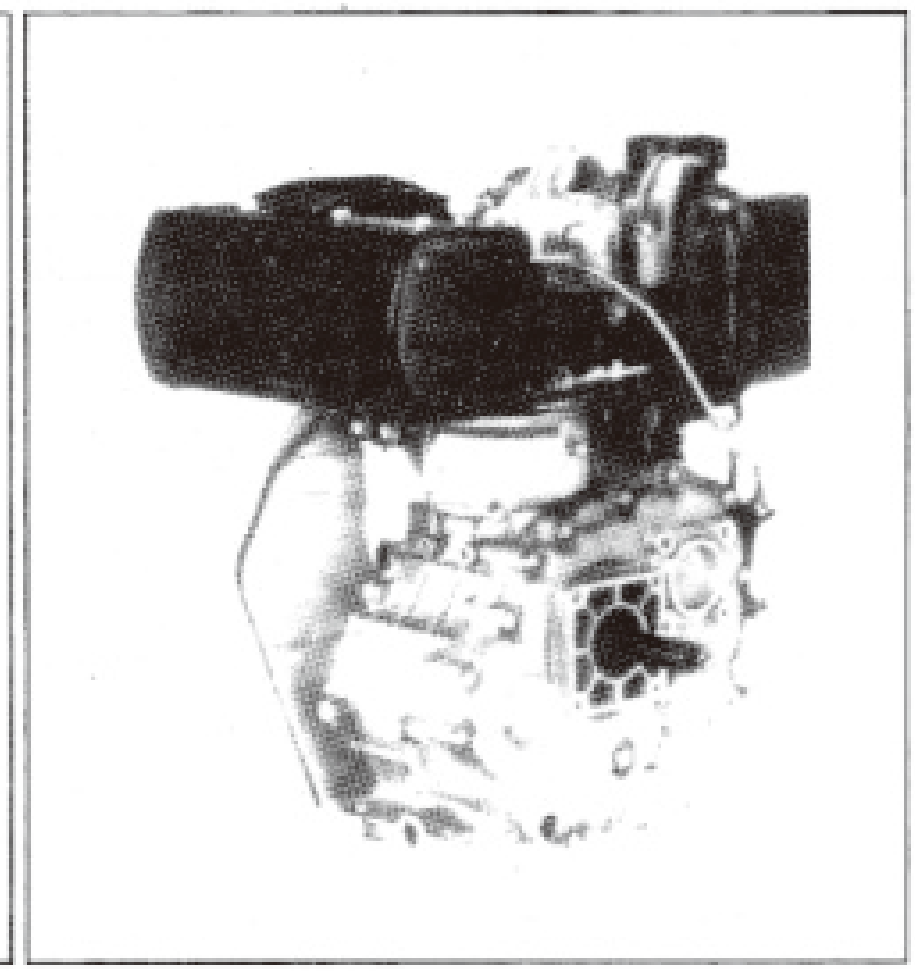

Back

Overall Figure

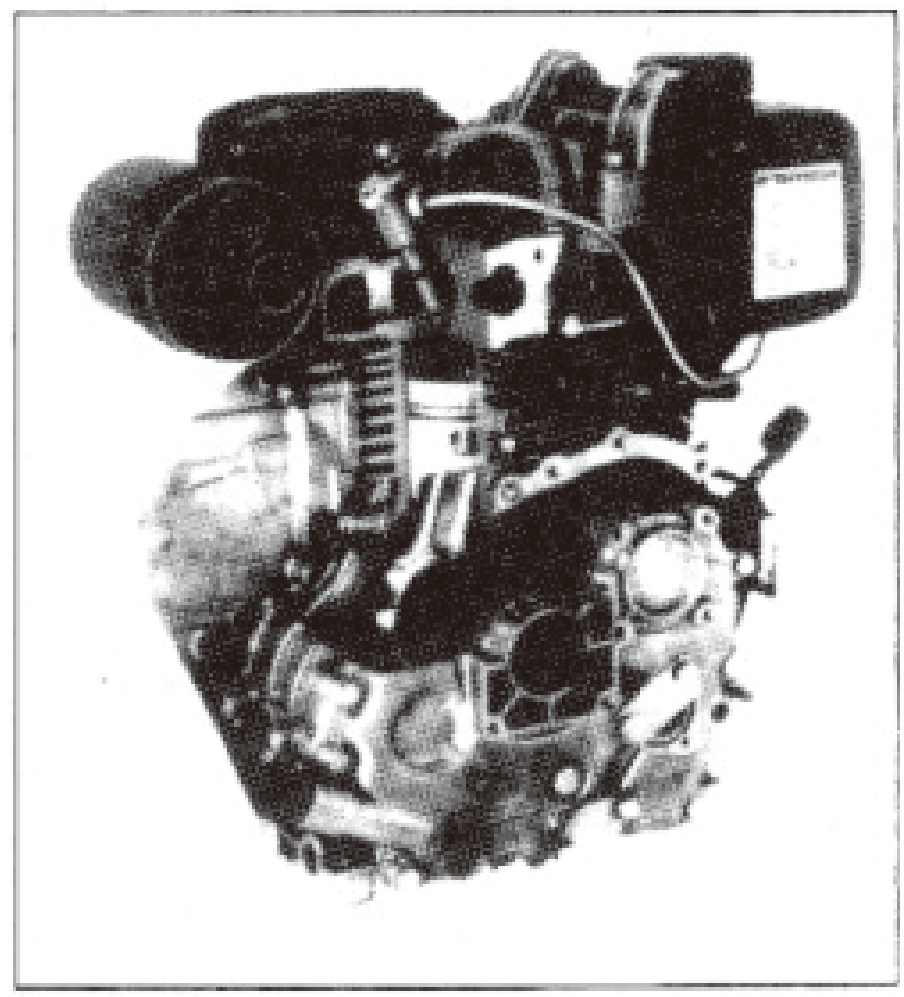

Cross Section Figure

CHAPTER 1 MAIN TECHNICAL SPECIFICATION AND DATA

1-1 Main Technical Specification

Item	Technical specification					
Model	170F(E) 170FS(E)		178F(E) 178FS(E)		186F(E)*186FS(E)	
Type	Single-cylinder, vertical, 4-stroke, air-cooled, dire t-injection					
Bore x stroke(mm)	70x55		78x62		86x70	
Displacement(L)	0.211		0.296		0.406	
Normal speed(r/min)	3000	3600	3000	3600	3000	3600
Normal Power KW(PS)	3.8	4.2	5.5	6	8.5	9
Mean effective pressure kPa (kgf/cm²)	443.2(452)	430.9(44)	540.5(552)	496.6(507)	561.6(573)	543.5(555)
Consumption rate of fuel g/KW(g/PS.h)	≤287(211)	≤299.2(220)	≤280.3(206)	≤292.5(215)	≤273.5(201)	≤285.7(210)
Consumption rate of machine g/KW≤4.08(3) oil	≤4.08(3)		≤4.08(3)		≤4.08(3)	
Fuel tank capacity (L)	2.5		3.5		5.5	
Lub.oil Full Capacity (L)	0.75		1.10		1.65	
Rotary direction of Crankshaft	Clockwise from flywheel end					
Cooling type	Forced air-cooled system					
Lub. type	Pressure, splash					
Starting type	Recoil manual start and optional electric start					
Net weight (kg)	27		33		48	

1-2 Overall Dimension and Installation

1-2.1 Overall and installation dimensions

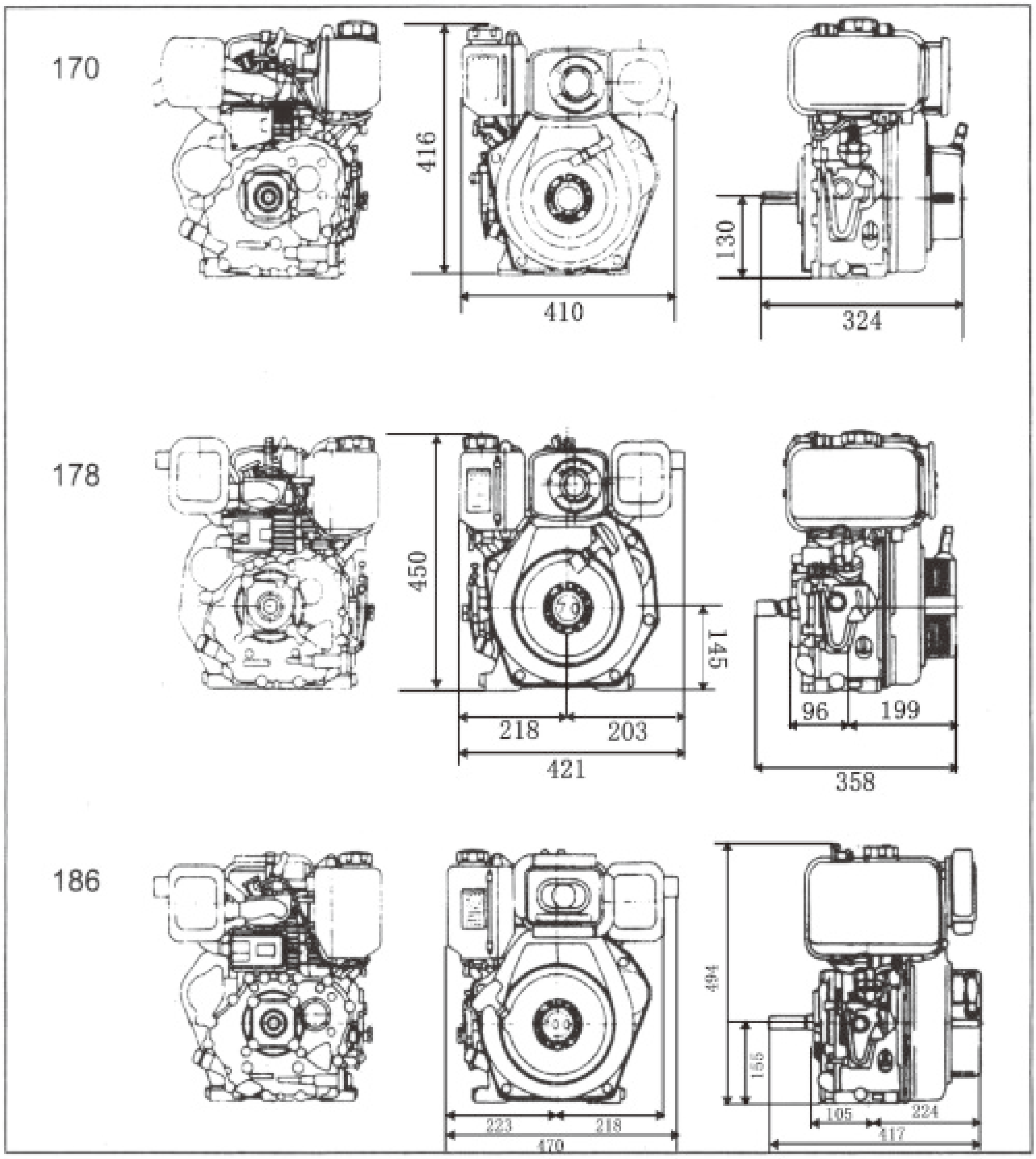

1-2.2 Installation

(1) There must be a tight stationary foundation for diesel engine to avoid vibration or movement when the engine is running.

(2) Be sure that the center position of output axle is correct.

(3) Check whether calibration between axle hole of belt wheel and key way shaft is correct and whether the tighten screw nut of belt wheel is tightened up.

(4) When the engine is matched with another belt-driving machine, the diameter of driving wheel must be in harmony with the speed of diesel engine and the size of axle wheel of the equipped machine. Otherwise it will directly influence working condition of diesel engine, the life of the engine and the efficiency of working machine.

The diameter of driving wheel (belt wheel) can be calculated as follow:

$$\text{Diameter of engine driving wheel} = \frac{\text{Diameter of axle wheel of working machine} \times \text{Speed of working machine}}{\text{Diesel speed}}$$

(5) Be sure that belt is tightened properly.

If the belt is fixed too tight, the engine will be overloaded while starting, the belt will be drawn longer, and the engine may be damaged.

If the belt is fixed too loose, the belt will slip at high speed and high load.

1-2.3 Allowed distance between belt wheel and engine

The V-axle wheel groove should be close to the engine as possible as it can be. The allowed value of L is listed in table 1-1

Item \ Model		170F	178F	※186F
Belt	Type	A	B	B
	Qty.	2	3	3
Min. Diameter of Pulley		68	97	135
L		≤80mm	≤70mm	

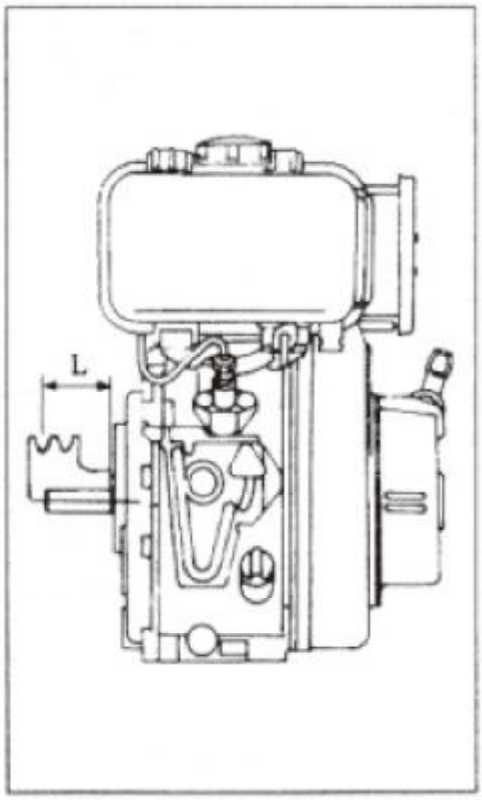

Table 1-1

Note: The meaning of L is shown in figure above. Please contact a dealer if you have any questions.

1-2.4 Crank shaft (Original type) driving angle must be less than 120°, see Fig. 1-1

1-2.5 Tilt

The tilt must be kept within the allowed value shown in Fig. 1-2

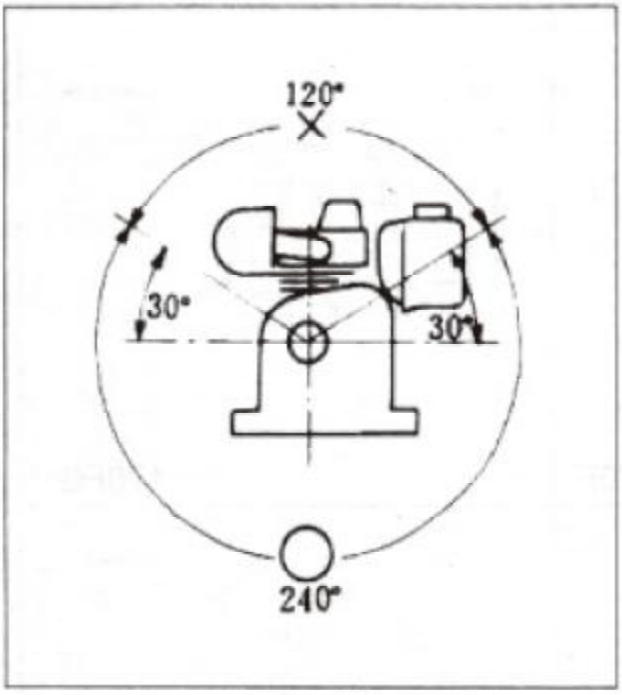

Fig 1-1

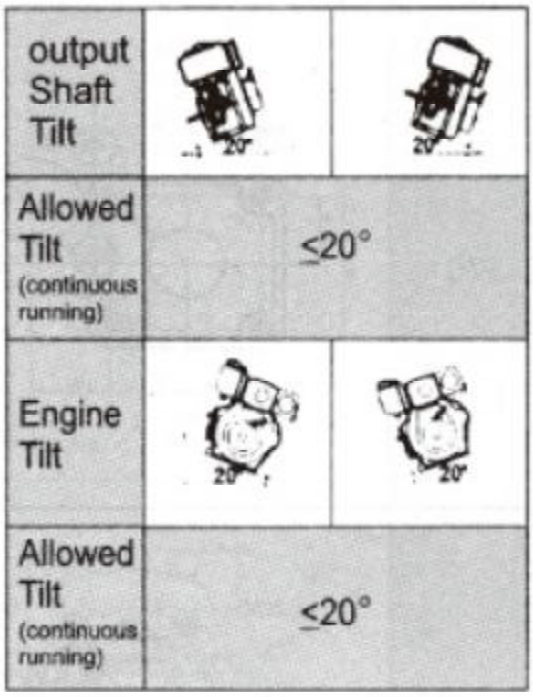

Fig 1-2

1-3 Sound Level

Description \ Model	170F	178F	*186F
Sound pressure level dB(A)	97.9	98	98
Sound power level dB(A)	110.9	111	111

unit: mm

MODEL	Crankshaft Output	
170	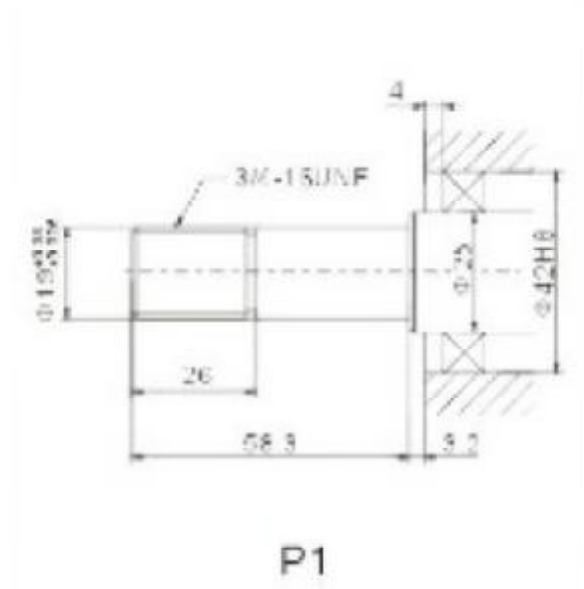 P1	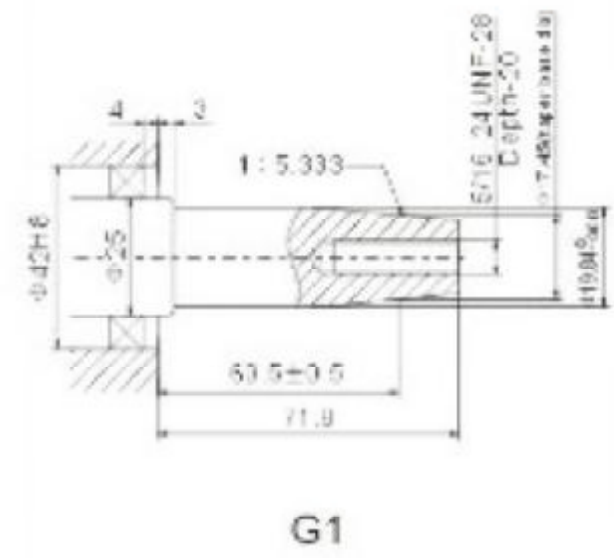 G1
176	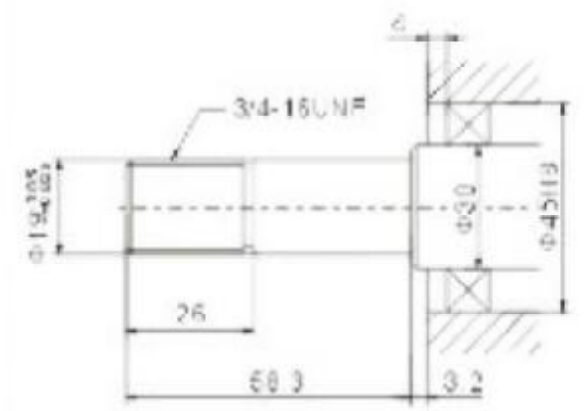 P1	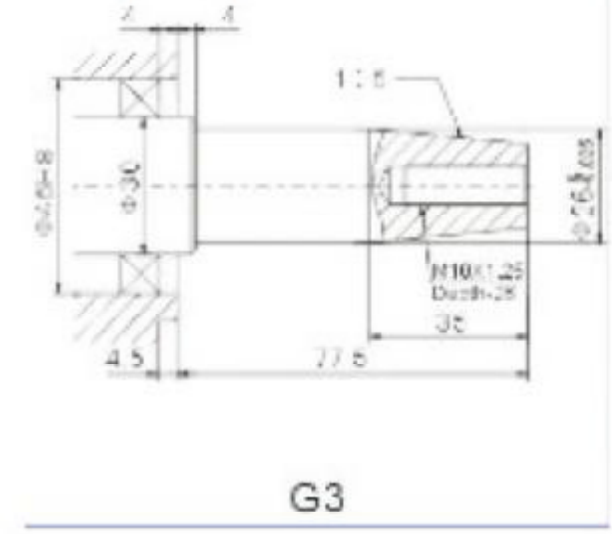 G3
186	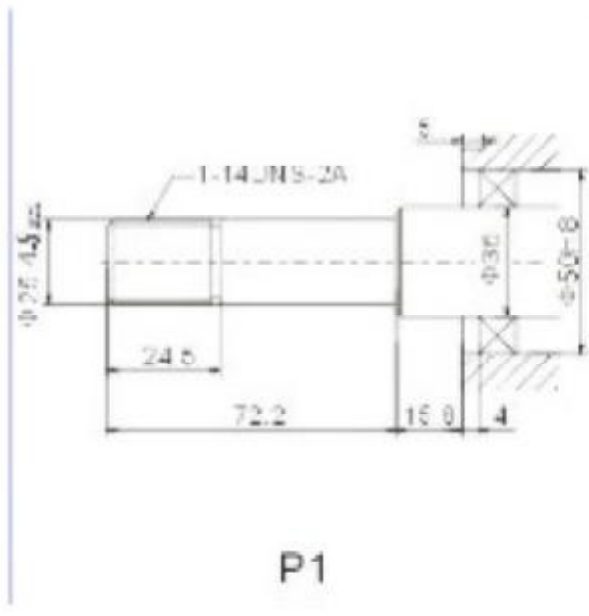 P1	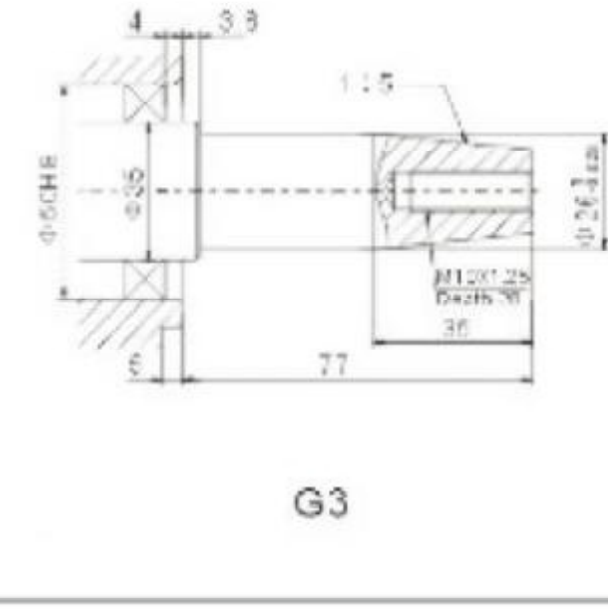 G3

unit: mm

MODEL	Crankshaft Output	
170	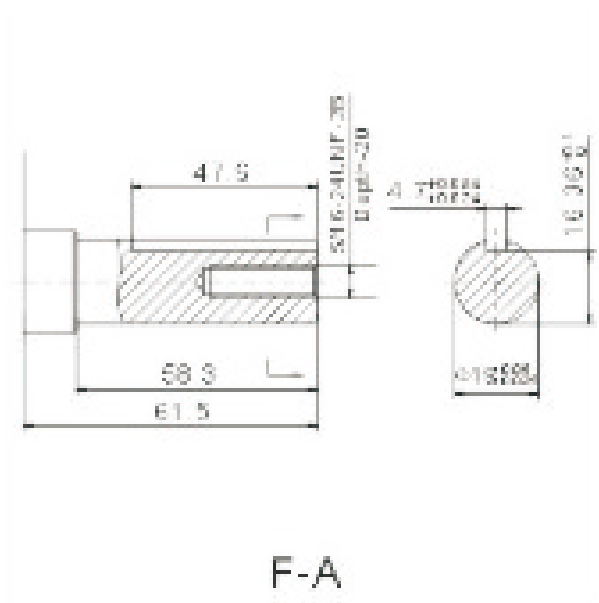 F-A	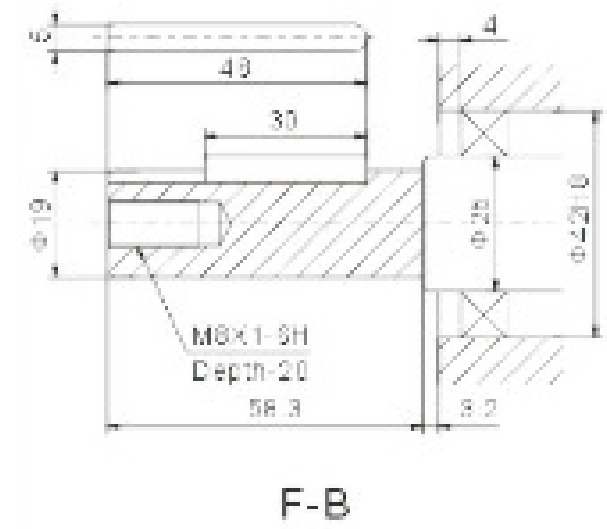 F-B
176	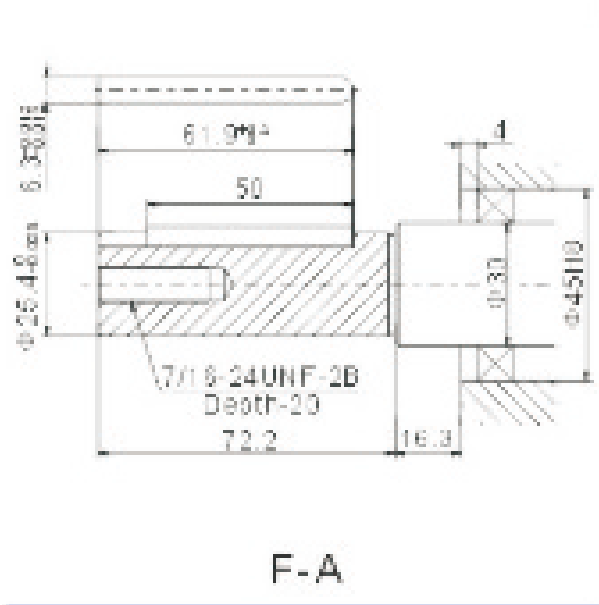 F-A	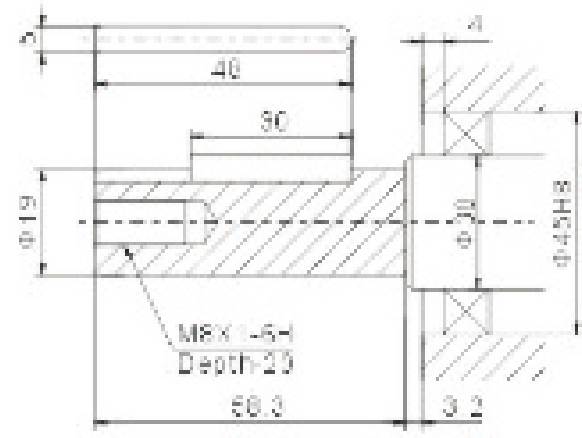 F-C
186	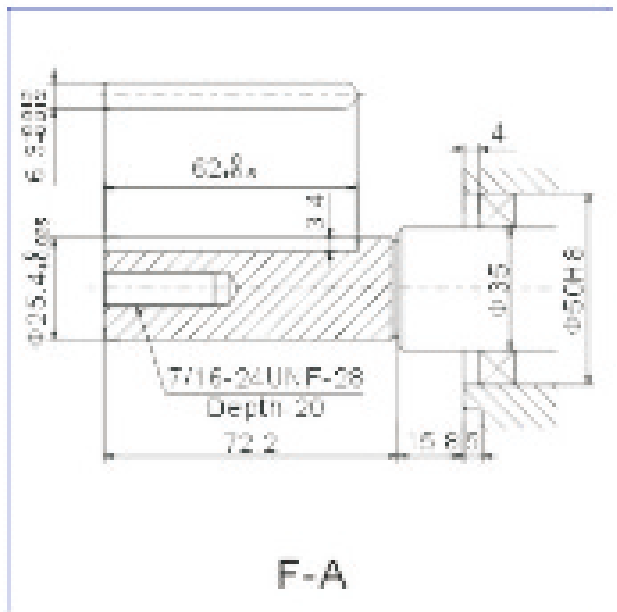 F-A	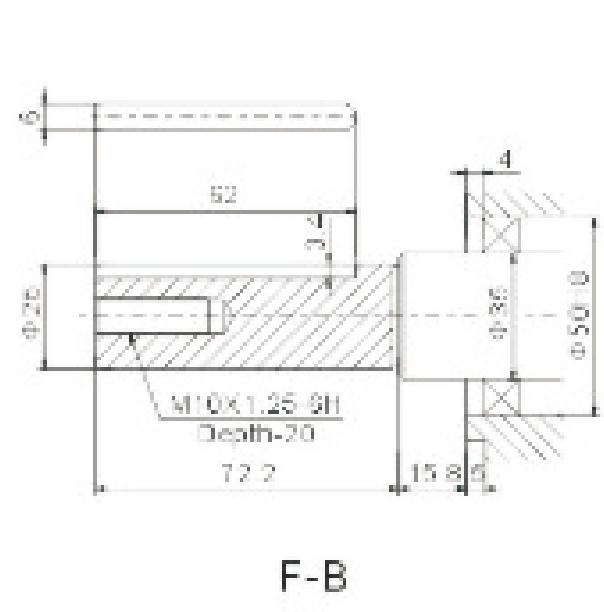 F-B

1-5 Names of Diesel Engine Parts

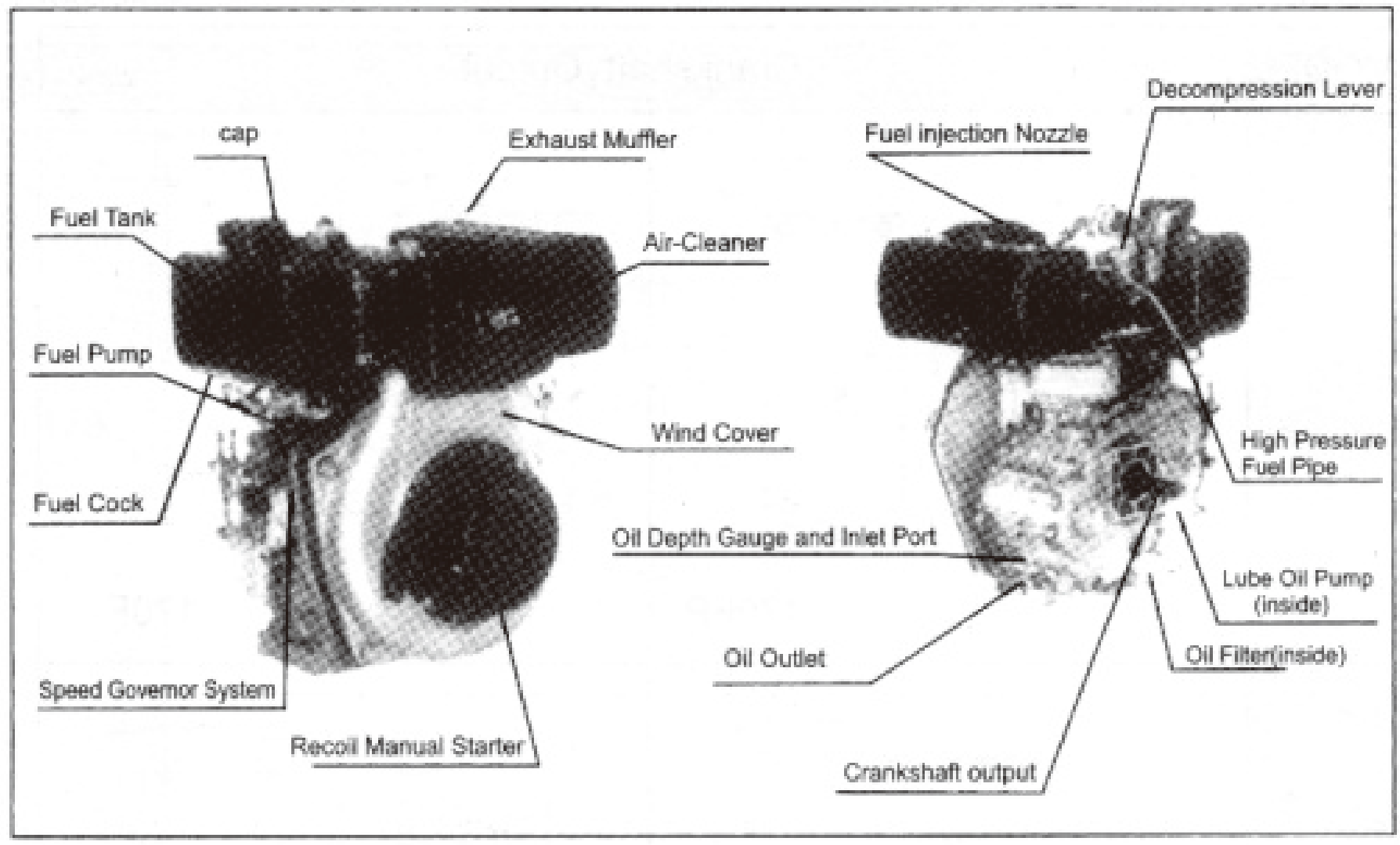

1-6 Range of temperature, smoke and pressure

Table 1-6

Model / Description	170F	178F	186F
Exhaust temperature(°C)	≤480		
Machine oil temperature(°C)	≤95		
Smoke (Bosch)	≤4		
Pressure of injection MPa (kgf/cm²)	19.6±0.49（200±5）		

1-7Torque for Tighten Up Main Screw Bolt and Nut

Table1-7 unit: N . m

Model / Description	170F	178F	※186F	Note
Connecting rod nut	20-22		40-45	Retighten up after test period
Cylinder head nut	**28-32**	**42-46**	**54-58**	
Flywheel nut	100-110	120-135		
Nozzle retainer nut	**8-10**			
Tighten bolt of rocker support	28-32			
Standard M8 bolt	**18-22**			
Standard M6 bolt	10-12			

CHAPTER 2 OPERATION OF DIESEL ENGINE

2-1 Attention for Safe Operation

2-1.1 The fuel must be filtered by silk fabric or settled for 24 hours before used. Do not add oil into fuel tank or crank shaft case when the engine is running.

2-1.2 Burnable and explosive goods should not exist around the engine, and the place for installation should be plain and ventilative.

2-1.3 Do not touch muffler with your hand when the engine is running or just after it has stopped.

2-1.4 The diesel engine must be run under rated power and rated speed. If you detect abnormal phenomenon, stop the engine immediately to check and remedy.

2-1.5 New engine or newly maintained one must be run at low speed and low load at first 20 hours. Do not allow to run it at high speed and full load.

2-2 Choice of Fuel, Lubricant and Preparation Before Start

Choice of fuel:

Only use light diesel fuel

Do not allow dust or water in the fuel and fuel tank.

Model	170F	178F	186F
Capacity Liter	2.5	3.5	5.5
British Gal	(0.42)	(0.59)	(1.03)

Caution:Do not let fuel level be higher than Red Mark

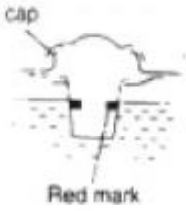

Core of air filter:

Do not wash the core of air filter because this part is dry type. When power of engine is not good or the color of exhaust is abnormal, change the core. Do not operate the engine without the core of filter.

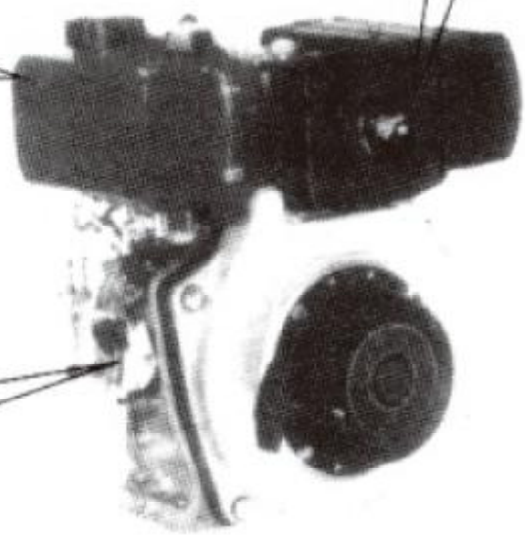

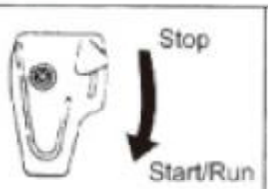

Oiling screw plug:
In winter, if it is difficult to start the engine, pull out the plug and fill 2cc lube oil into the hole and then return the plug. keep plug in tight condition. The engine can absorb dust and be damaged if the plug is taken away.

Decompression lever:
Push decompression lever down to start the machine

The fuel oil and machine oil in the engine were drained away before exfactory. Check fuel pipeline before refilling fuel oil and starting the engine. If there is air in the pipeline, drain it out. The detailed method is to loosen the nut of connection between injection pump and fuel pipe and drain out the air untill there is no bubble in fuel.

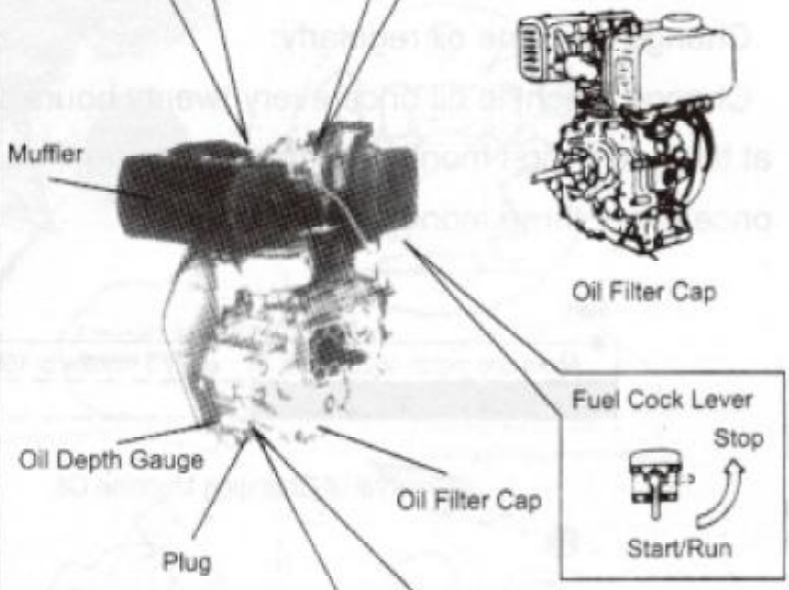

Lubricant inlet:
Set the engine on flat ground and then fill lubricant into the inlet. When checking oil level, put the oil scale into the inlet lightly. Do not turn the oil scale.

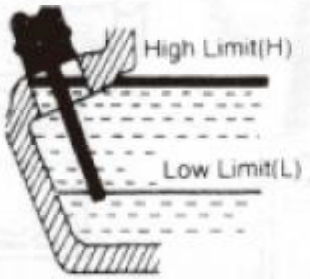

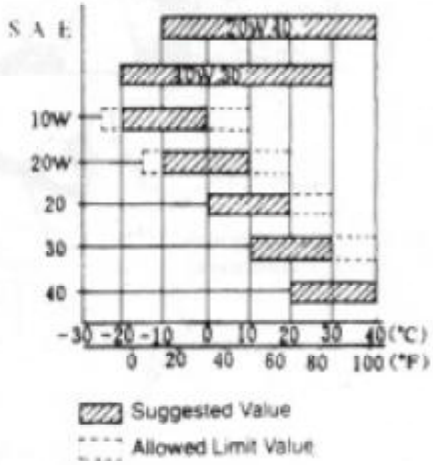

Model / Capacity	170F	178F	186F
Litre (British Gal)	0.75 (0.16)	1.1 (0.24)	1.65 (0.36)

Be sure to use lube oil GRADE CC or CD. A.P.I Diesel Engine Service.

If your engine is still a newer one, its life would be shortened for over-load

At first 20 hours the engine must be started and stopped according to test run method

Avoid over-load:

Avoid over-load during test run.

Change machine oil regularly:

Change machine oil once every twenty hours or at the end of first month at primary running time and then once every three months or 100 hours.

Interval of Changing Machine Oil

2-3Start of the Diesel Engine

2-3.1 Recoil start

NOTE:WHEN THE ENGINE IS RUNNING,DO NOT PULL THE RECOIL HANDLE OTHERWISE THE ENGINE MAY BE DAMAGED.

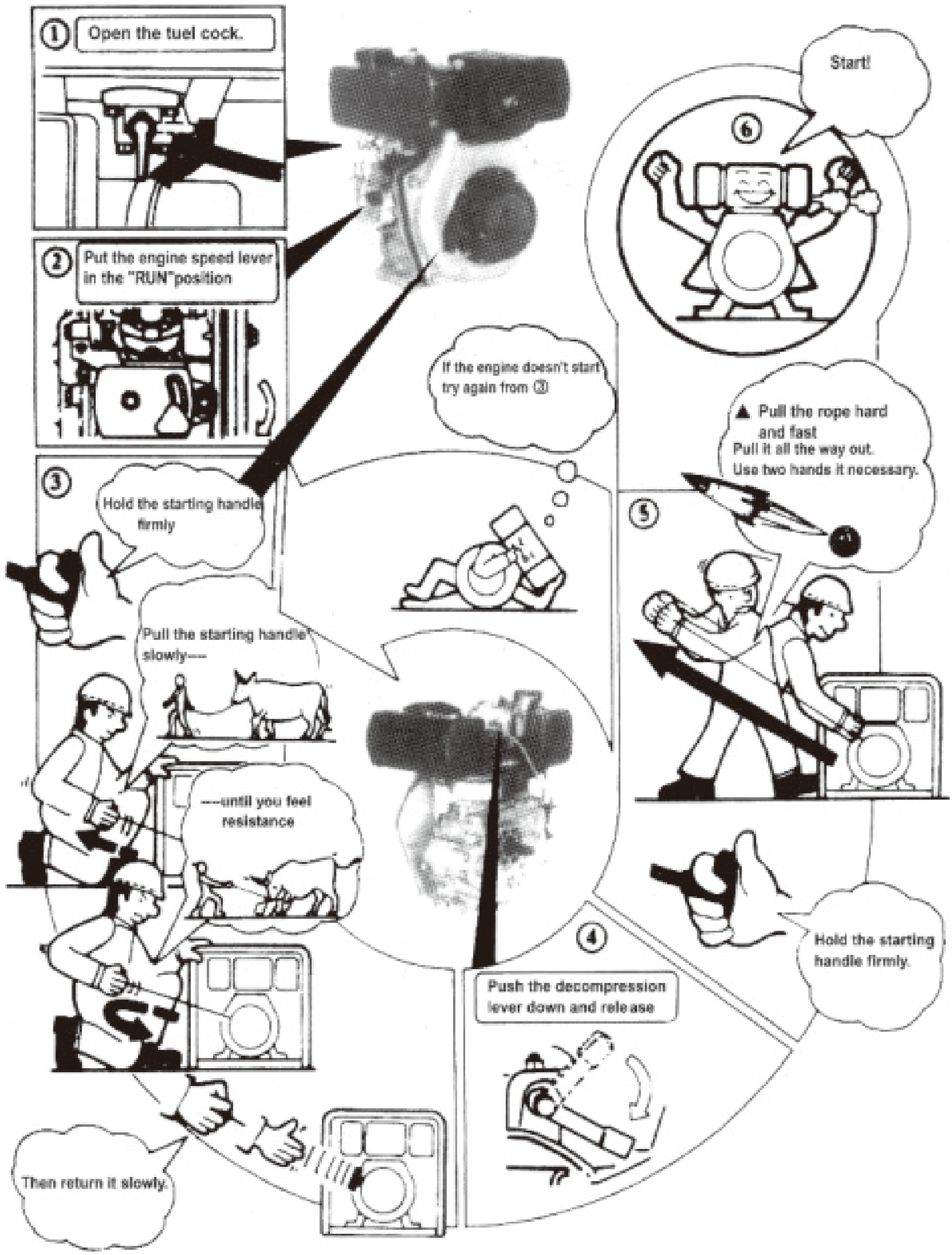

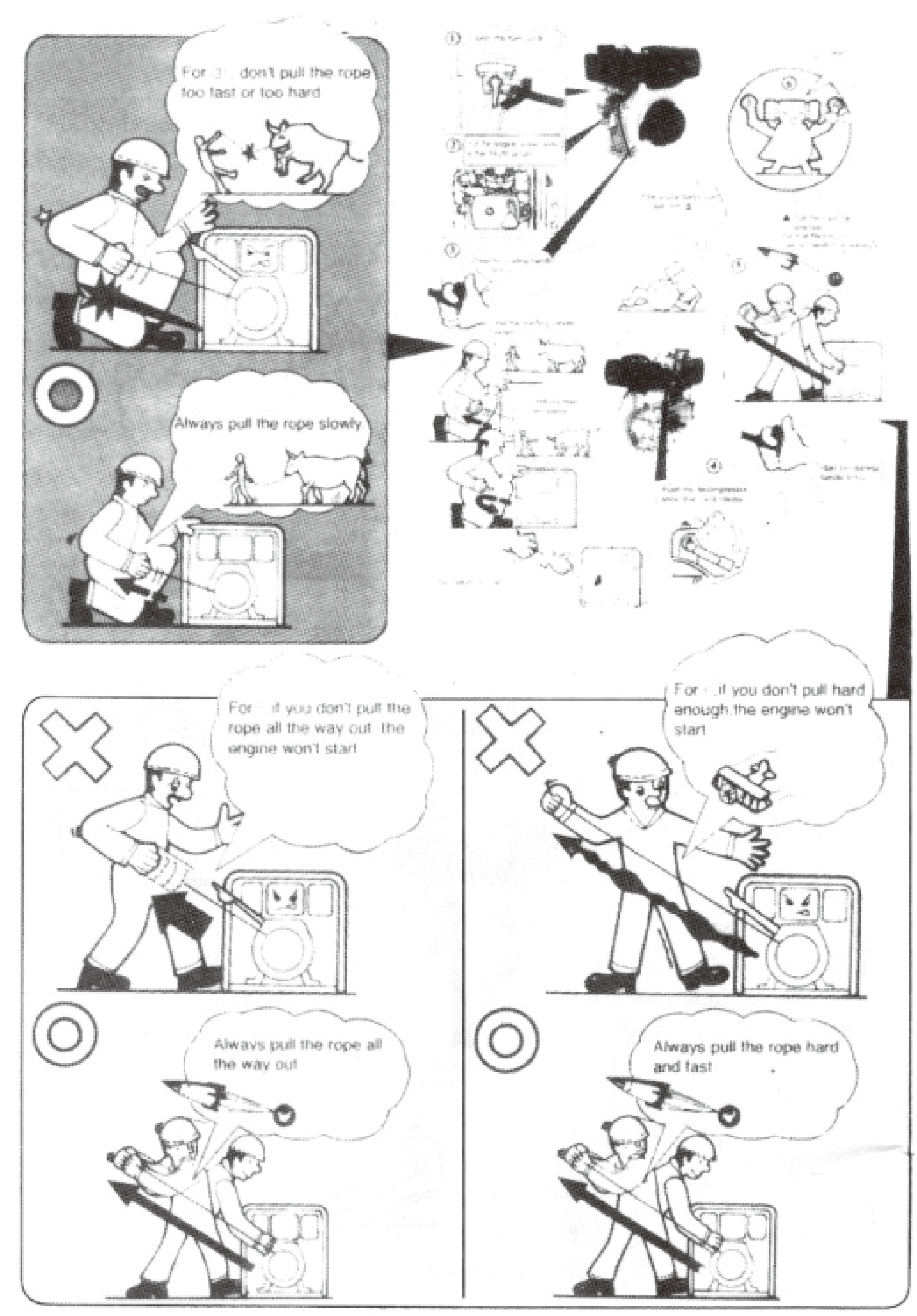

2-3.2 Motor-driven type start

(1)start

The preparation of motor-driven start type is same as manual type (Recoil type).

① Open the fuel cock.

② Set the speed governor lever at "start" position.

③ Turn on the start switch toward clockwise to "start" position.

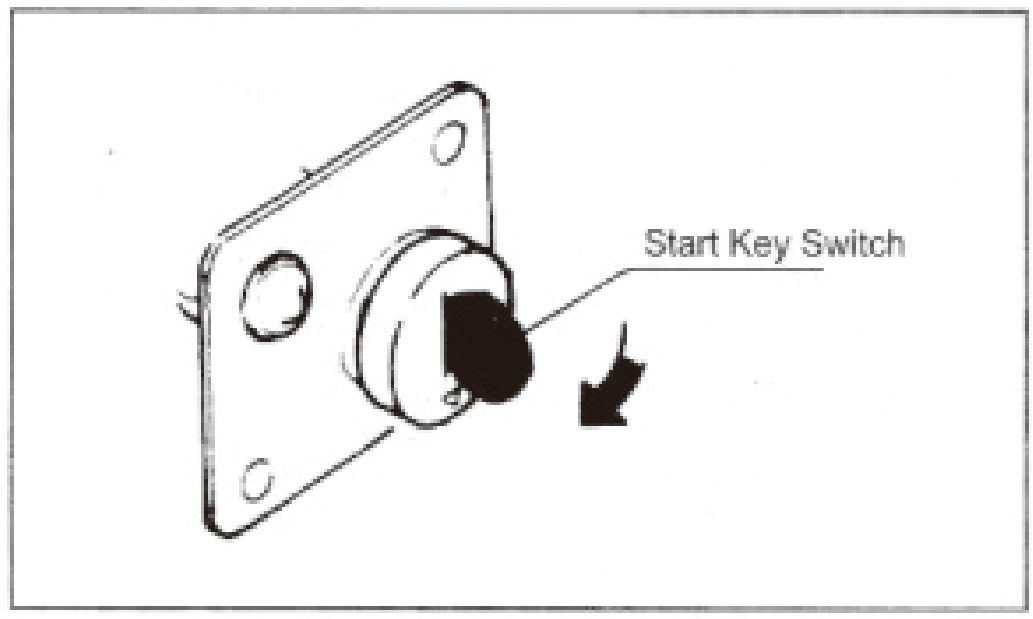

③If the engine is started, take your hand away from key switch immediately.

④If the engine do not start after 10 seconds, wait for a while (about 15 seconds) then start again.

> If the run time of motor is too long, the voltage of accumulator will drop and the motor may be damaged.
>
> Keep key switch at "ON" position when the engine is running.

(2) Accumulator

①Check the liquid level in accumulator every month. If the level is lower than the low limit mark, refill distilled water up to the upper limit mark.

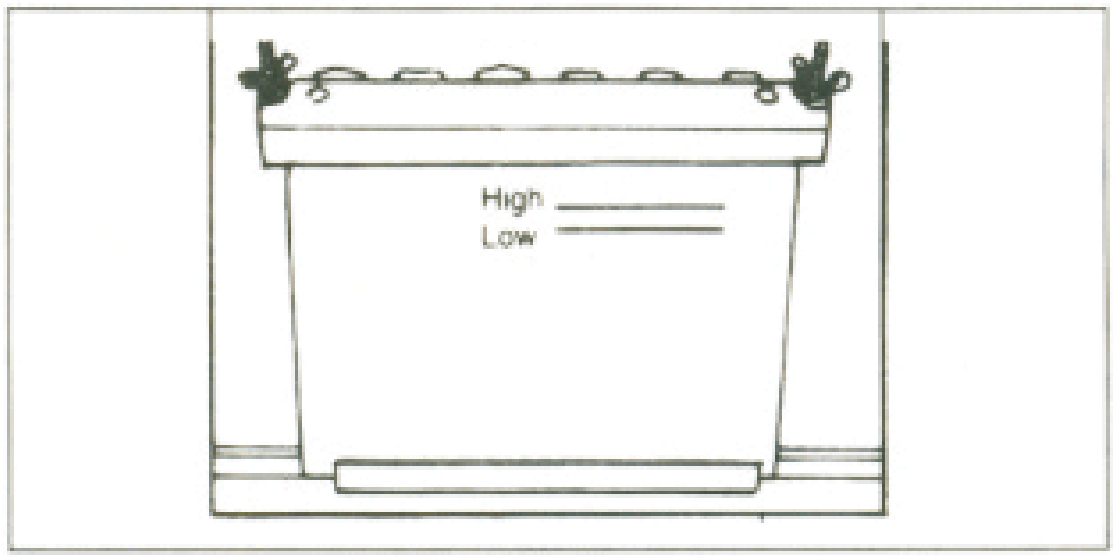

If the liquid in the accumulator is not enough, the electric motor will not run for too little electric current. So, keep the liquid level between upper and low limit marks.

The liquid will splash on near parts (Which will be spoiled) if it is too much in the accumulator.

2-3.3 Aided start

If the engine is difficult to start in winter, unscrew the plastic cock then fill 2cc machine oil into the hole.

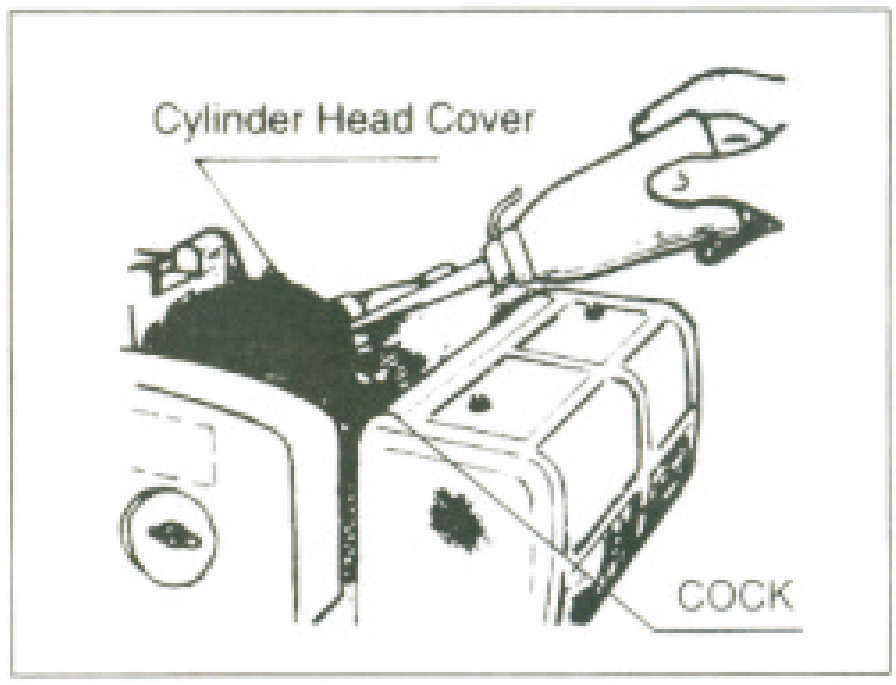

Do not use volatile liquid as fuel, such as petrol etc. And do not take away the air cleaner for easy start of the engine. If you do so, it may cause explosion.

Do not pull out the plug unless filling oil. If plug is not at its correct position, rain, dust or other impurity may be sucked into the engine to cause serious failure or to damage engine parts.

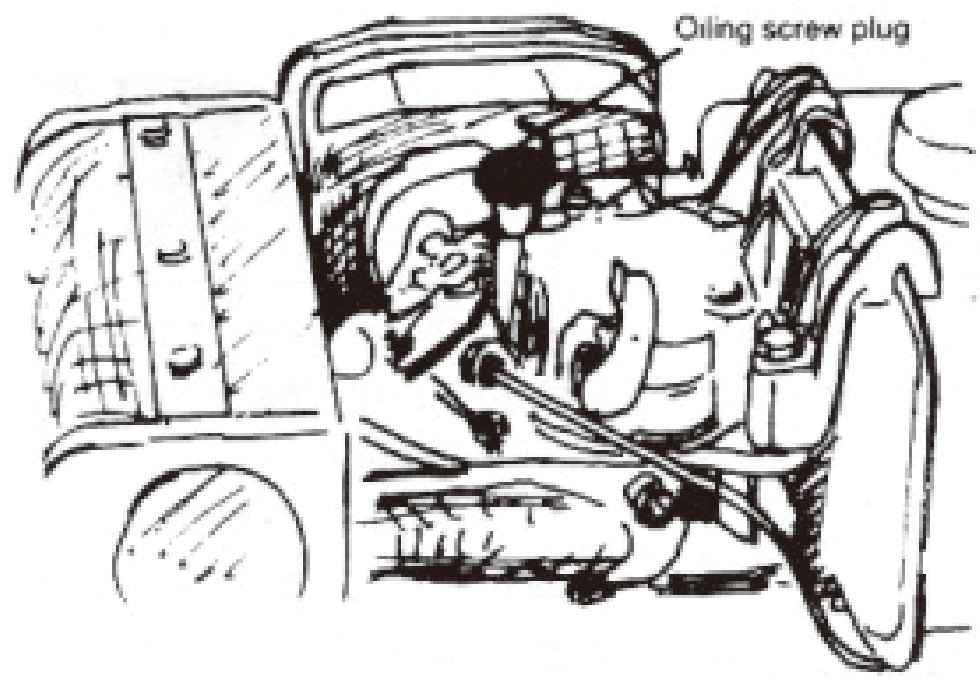

2-4 Run and Stop of the Diesel Engine

2-4.1 Run of the engine

(1) Preheat the machine for three minutes at no load.

(2) Set the speed governor lever of the engine at required speed position.

> Use the speed governor lever to control the speed of engine.
>
> Do not loosen or readjust the limit screw of speed or oil-filling limit screw, otherwise the performance of the machine may be changed.

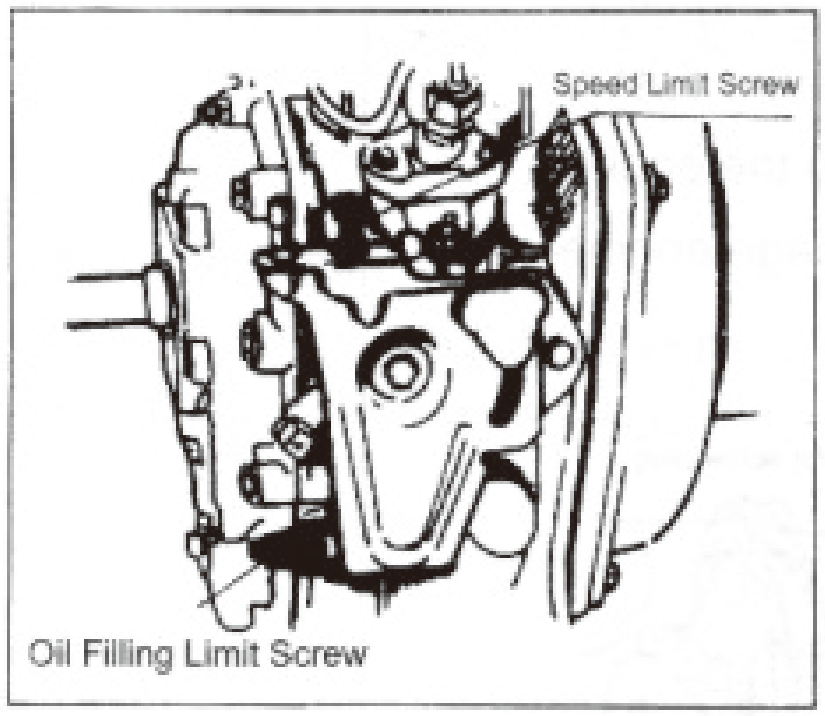

2-4.2 Check, when the machine is running

(1)Whether there is abnormal sound and vibration?

(2)Whether combustion is not good overspeed?

(3)Whether the color of exhaust gas is normal (black of too white)?

If any of above phenomena is detected, stop the engine immediately and contact our local dealer.

2-4.3 Stop of the engine

(1)At first set the speed governor lever at low speed position before stopping the engine and then run the engine at no-load for three minutes.

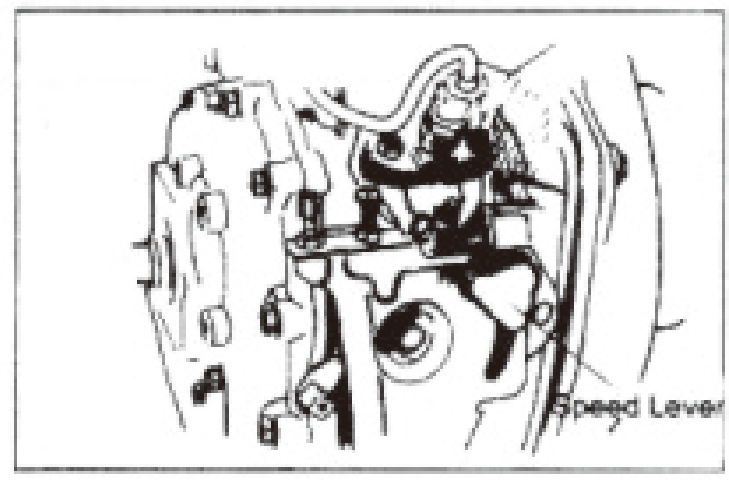

(2)Set the speed governor level at "stop" position

> Decrease the load gradually when stopping the engine. Sudden stop of engine will cause abnormal increasement of temperature.
>
> Do not stop engine with decompression lever.

(3)Set the fuel cock at "S" (stop position)

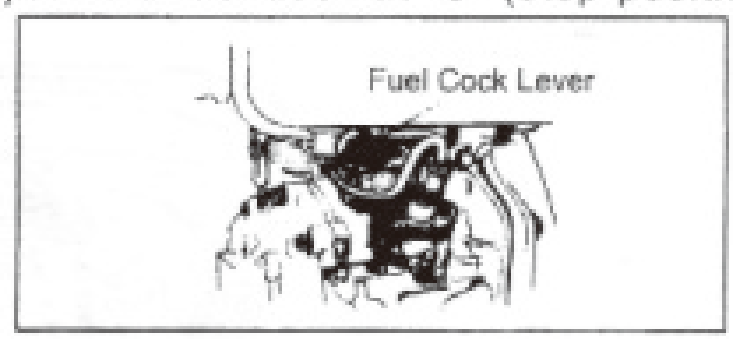

(4)If the engine possesses motor type starter, turn the start key switch to "OFF" position.

(5)Pull out the recoil handle slowly until pressure is felt by your hand (that means at the point of compression stroke, where the intake and exhaust valves are closed) and then let the handle back to its natural position. So that it can prevent rust when the engine is not used.

Note: Only when stopping the engine can you pull the recoil handle, otherwise the engine may be damaged.

CHAPTER 3 TECHNICAL MAINTENANCE OF DIESEL ENGINE

Remark: Important installation and maintenance should be processed by technician

3-1 Daily Check and Maintenance

Check oil level of machine oil whether it is between upper and low limit.

Check whether there is oil leakage

Clean up the dirt, greasy dust on the diesel engine and its appendage and keep the engine clean.

Remove malfunction detected during operation.

3-2 Regular Check and Maintenance

Regular Check and Maintenance are very important for normal operation and durability of the engine The following table indicates what is necessary and when to check the engine. Marks show special tool or technique is needed for maintenance. Please contact our local dealer.

Item \ Time	Daily	After 20 hours or 1 month	100 Hours or Every 3 month	500 Hours Every 6 month	1000 Hours or Every year
Check and tighten the nut and screw	○				
Check and fill machine oil	○				
Change machine oil		○ (First time)	○ (Second time and later)		
Clean and change oil filter				○	● (Change)
Check oil-leakage	○				
Change the core of air filter		Cycle of check and maintenance will be shortened at dusty place		○	
Clean fuel tank	Every month				
Clean or change fuel filter				○ (Clean)	○ (Change)
Check nozzle				●	
Check injection pump				●	
Check pipeline of fuel				○ (Change if necessary)	
Adjust valve clearance of inlet and exhaust		● (First time)			
Grind valve holder of inlet and exhaust					●
Change piston ring					●
Check accumulator liquid	○ Every month				
Clean the core of air filter		○ (Clean) Every month or 50 hours			

Clean and change fuel filter

The fuel filter must be kept clean day-to-day to guarantee max. output of the engine

Take the filter out of fuel tank and clean it.

Clean	Every six months or 500 hours
Change	Change year or 100 hours

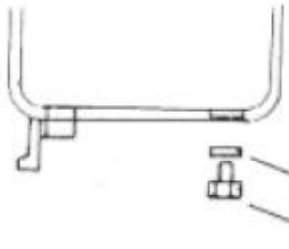

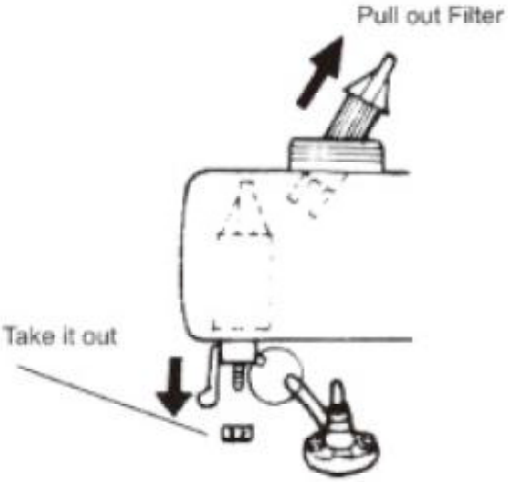

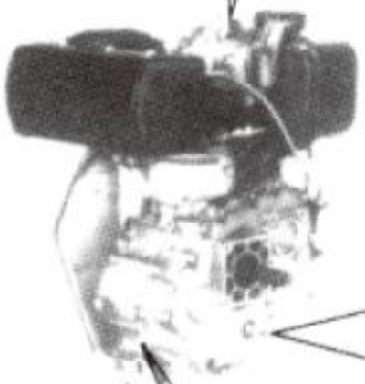

Change Lube oil filter

Clean	500 Hours
Change	1000 Hours or when maintaining

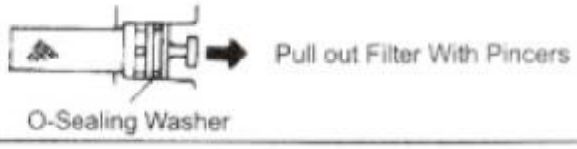

Model	170F	178F	*186F
Capacity (Liter)	0.75	1.10	1.65

Change	Operating time
First	First month or after 20 hours
Second and Later	Every 30 months or 1000 hours

Change Lubricant

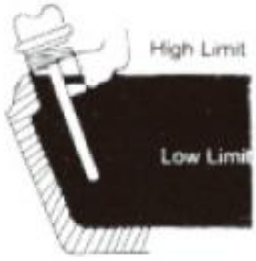

Change the core of air filter

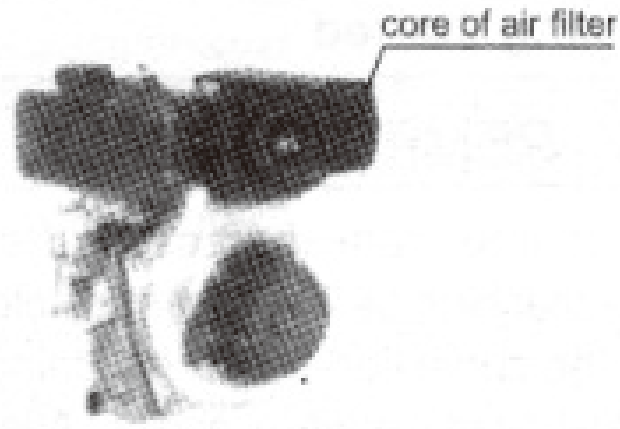

Change	Every 6 months or 500 hours (earlier if necessary)

Do not use detergent to clean filter core

Use a soft brush instead.

Do not operate the machine without core or with a bad core.

The core of filter obstruction means that the air in combustion chamber will decrease, and then the output of engine decreases, and consumption of fuel and lubricant increases. It is also difficult to start the engine. Clean the core of filter regularly

3-3 Storage for a Long Period.

Please do as follow if the engine will be stored for a long period.

(1) Run the machine for three minutes and then stop the machine

(2) Drain away the lubricant before the engine becomes cool and then refill new machine oil.

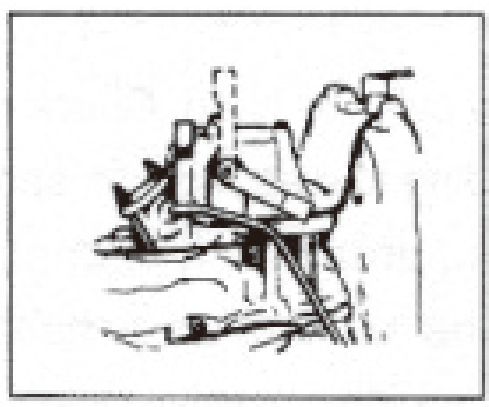

(3) Disassemble the rubber plug on the cover of rocker shaft and then fill about 2cc lubricant into it and return the plug back to its position.

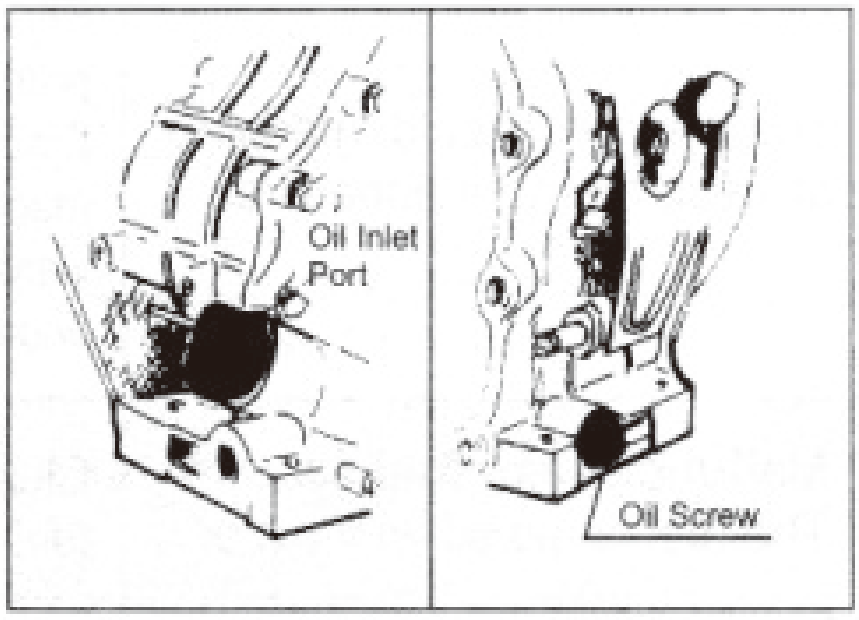

(4) Recoil type start

Push down and keep the decompression lever at the non-compression point and then pull the recoil starter two or three times.

Motor-driven type start

Keep the decompression lever at non-compression point and let the engine rotate for two or three seconds with the start key switch on "start" position (Do not run the engine).

(5) Pull up the decompression lever and pull out recoil starter slowly until the resistance is felt by your hand (that is at the point of compression stroke, where the intake and exhaust valves are closed, which can prevent engine from rust).

(6) Clean out machine oil and dirt from the engine, and put the engine at a dry place.

CHAPTER 4 MALFUNCTION AND REMEDY OF DIESEL ENGINE

4-1 Cause and remedy for the Engine Not Being Started

CAUSE	REMEDY
The weather is cold, machine oil become more adhesive	Fill machine oil into crankshaft case after preheated. Fill machine oil into inlet manifold Disassemble the conection belt of matching machine and then start the diesel engine. After wards the engine becomes hot, stop the engine. and ressemble the belt. Start the engine again.
Malfunction of fuel system The fuel is mixed with water	Clean fuel tank filter and fuel pipe, change fuel
The fuel become thickening and not easy to flow	Use the specific fuel
There is air in the fuel system	Drain out the air and tighten each connector of fuel pipe.
Injection fuel is little or no, the spray is not good	Check the position of speed governor handle, clean spray nozzle, fuel pump, maintain or change the pump or nozzle if necessary
Combustion is not complete	The spray nozzle is not good, delivery angle is not correct, gasket of cylinder head is leaky and the pressure of compression is not enough. Remedy with its cause.
Diesel fuel delivery is interrupted	Diesel fuel is too little in the fuel tank. Fill the fuel into the fuel tank. If the fuel pipe and fuel filter are obstructed or leaky, remedy them.
Compression pressure is not enough in the cylinder. The nut of cylinder head is not tighten or gasket of cylinder is damaged or leaky.	Tighten the nut of cylinder head. Check gasket of cylinder according to diagonal line sequence and standard requirement. If changing the gasket, tighten the nut of cylinder head once again after rerunning the diesel engine.

The gap of piston ring is too big because of wear	Change the piston ring.
Each gap of piston rings line up and cause leakage	Set each gap of piston at angle of 120°
The piston rings are sticked seriously or broken	Clean with diesel fuel or change rings
Gas valves leakage	Grind the gas valves. If the vestige is too deep, please send it to factory for remedy.
The valve clearance is not correct	Adjust the clearance as specified.
The valve stem is clipped on guide pipe	Disassemble the gas valve and clean the stem and guide pipe.

4-2 Cause and Remedy for Not Enough Power of Diesel Engine

CAUSE	REMEDY
Malfunction of fuel system: Parts obstruction of fuel pipeline and fuel filter	Check fuel switch, it must be opened fully. Clean fuel filter and fuel pipeline.
The pumping of fuel is not good	**Maintain or change the damaged parts of fuel pump.**
Malfunction of nozzle: Injection pressure is not correct	Adjust the injection pressure.
Spray hole carbon deposit	Clean
Needle valve adhered	Clean or change.
Fitting is too loose between needle valve and needle valve body	Change
Air filter is obstructed	Disassemble to clean or change the core of filter.
Speed is not high enough	Check the speed of diesel engine with tachometer. Adjust the adjust high speed limit screw.

4-3 Cause and Remedy for the Engine Stopping Automatically

CAUSE	REMEDY
Malfunction of fuel system: No fuel	Add fuel.
Fuel pipeline or filter is obstructed	Maintain or clean
There is air in fuel system	Drain out the air.
Needle valve of nozzle adhered	Clean, grind the nozzle or change it necessary.
Air filter is obstructed	Maintain or brush off.
The load incease suddenly	Decrease the load.

4-4 Cause and Remedy for Exhaust with Black Smoke

CAUSE	REMEDY
Overload	Decrease the load. If working machine is not properly matched, change it.
Fuel injection is not good	Check the injection pressure and spray condition and **Correct it.** Or change the nozzle if it is damaged.
Air is not enough or leaky	Clean the air filter, check the cause of leakage and remedy.

4-5 Cause and Remedy for Exhaust with Blue Smoke.

CAUSE	REMEDY
There is machine oil in cylinder	Check oil level and drain away the unnecessary, machine oil
Piston ring is clipped or worn, and its springness is not enough or each gap of ring turns to same direction to make the machine oil go up	Check, change the piston ring, and cross each gap position
The gap between piston and cylinder is too big	Remedy or change
Valve and guide are worn	**Change**

4-6 Cause and Remedy for Exhaust with White Smoke

CAUSE	REMEDY
There is water in diesel fuel	Clean the fuel tank and diesel filter, change diesel fuel.

4-7 Methods and Positions of Stopping to Check When the Engine's Malfunctioning

CAUSE	REMEDY
Speed is sometimes high, sometimes low	Check the speed governor system whether it is nimble and whether there is air in fuel pipeline.
Abnormal sound suddenly appear.	Check each motional part carefully
Exhaust with black smoke suddenly	Check fuel system, especially nozzle.
There is metal knocking sound rhythmically in the cylinder	The fuel delivery angle is too big. Adjust it.

Appendix1 Symbol Explains of Engine Set Sign

NO	SYMBOL	QTY	MEANING	POSITION
1	HOT. MUFFLER	1	dangerous & no touching or you may get scalded	near the muffler and the exhaust
2		1	fire is forbidden	the out side of the shell and the fuel tank
3		1	accelerograph control	near accelerograph
4		2	the oil-filling hole	near the oil-filling hole
5		1	the inlet of the air cleaner	the inlet of the air cleaner
6		1	the oil filler	near the oil filler
7	DIESEL FUEL ONLY	1	diesel only	near the fuel-filling hole
8		1	flying rings	near flying rings
9	STOP	1	stop running	near accelerograph
10		1	study the operating manual before using	out side of the shell of the set
11		1	the fuel indicator	the fuel indicator
12	0 1	1	the cock of the fuel tank	near the cock of the lieu lank
13		1	no smoking	out side of the shell of the set

APPENDIX 2 USER SUGGESTION TABLE

Model / Item		ex-factory Date	
		ex-factory No.	
User Name		Occupation	
Address			
Bought From			
State While Unpacking			
Operation Condition			
Damaged Parts			
Troubles/ Malfunction			
Suggestions			

Date:_____