KINCROME

Compact Electric High Pressure Washer 2100W

K16253

Original Instructions

ED1 AUG 2024

Caution: Do not allow persons to operate or assemble this pressure until they have read this manual and developed a thorough understanding on how the pressure washer works

KINCROME Compact Electric High Pressure Washer 2100W

K16253

Know Your Product

Specifications

Input voltage:	230-240V ~ 50Hz
Motor type:	Induction Motor
Rated power:	2100W
Hose length:	8m
Hose diameter:	Ø11.8mm
Hose type:	PVC
Allowable pressure: *	2,400psi (16.5Mpa)
Rated pressure:	1,600psi (11Mpa)

Maximum flow rate:	7.2l/min
Rated flow rate:	6.0l/min
Degree of protection:	IPX5
Water inlet temperature:	5°C-50°C
Soap dispenser capacity:	400ml
Power cord length:	5m
Guaranteed sound power level:	93dB
Weight:	13.08kg

*Allowable pressure is commonly referred to as maximum pressure.

General Safety Warnings

SAVE ALL WARNINGS AND INSTRUCTIONS FOR FUTURE REFERENCE.

WARNING! Read all safety warnings and all instructions. Failure to follow the warnings and instructions may result in serious injury and/or death.
WARNING! The product is designed for use with a neutral cleaning agent supplied or recommended by the manufacturer.
The use of other cleaning agents or chemicals may adversely affect the safety of the product.
Wear a complete personal protective equipment when operating the product, such as boots, safety gloves, safety helmets with visor, and hearing protection. Use high-impact visors only with liquid splash protection.
WARNING! Do not use the product when people are within range unless they wear protective clothing.

1) WORK AREA SAFETY

a. **Keep work area clean and well lit.** Cluttered or dark areas invite accidents.
b. **Do not operate power tools in explosive atmospheres, such as in the presence of flammable liquids, gases or dust.** Power tools create sparks which may ignite the dust or fumes.
c. **To reduce the risk of injury, keep children and visitors away.** All visitors should wear safety glasses and be kept at a safe distance from the work area.
d. **This appliance is not intended for use by persons (including children) with reduced physical, sensory or mental capabilities, or lack of experience and knowledge, unless they have been given supervision or instruction concerning use of the appliance by a person responsible for their safety**.

2) ELECTRICAL SAFETY

a. **Inadequate extension cords can be dangerous. If an extension cord is used, it shall be suitable for outdoor use, and the connection has to be kept dry and off the ground.** It is recommended that this is accomplished by means of a cord reel which keeps the socket at least 60 mm above the ground. Always use an approved extension lead suitable for the power input of this tool. Before use, inspect the extension lead for signs of damage, wear and ageing. Replace the extension lead if damaged or defective. When using an extension lead on a reel, always unwind the lead completely. Use of an extension lead not suitable for the power input of the tool or which is damaged or defective may result in a risk of fire and electric shock.
b. **Always switch off the mains disconnecting switch when leaving the machine unattended**.
c. **Never touch the mains plug and the socket with wet hands or use the appliance in the rain.** Power tool plugs must match the outlet. Never modify the plug in any way. Do not use any adapter plugs with earthed (grounded) power tools. Unmodified plugs and matching outlets will reduce risk of electric shock.
d. **Avoid body contact with earthed or grounded surfaces such as pipes, radiators, ranges and refrigerators.** There is an increased risk of electric shock if your body is earthed or grounded.
e. **Do not expose power tools to rain or wet conditions.** Water entering a power tool will increase the risk of electric shock.
f. **Do not abuse the cord.** Never use the cord for carrying, pulling or unplugging the power tool. Keep cord away from heat, oil, sharp edges or moving parts. Damaged or entangled cords increase the risk of electric shock.
g. **When operating a power tool outdoors, use an extension cord suitable for outdoor use.** Use of a cord suitable for outdoor use reduces the risk of electric shock.
h. **The electric supply connection shall be made by a qualified electrician and comply with IEC 60364-1.**
i. **It is recommended that the electric supply to this machine should include either a residual current device that will interrupt the supply if the leakage current to earth exceeds 30 mA for 30 ms or a device that will prove the earth circuit**.
j. **All electrical connections are made in a dry area.**
k. **Outdoor power points must be weatherproof and installed by a qualified electrician.**

3) PERSONAL SAFETY

a. **Stay alert, watch what you are doing and use common sense when operating a power tool.** Do not use a power tool while you are tired or under the influence of drugs, alcohol or medication. A moment of inattention while operating power tools may result in serious personal injury.
b. **Use personal protective equipment.** Always wear eye protection. Protective equipment such as dust mask, non-skid safety shoes, hard hat, or hearing protection used for appropriate conditions will reduce personal injuries.
c. **Prevent unintentional starting.** Ensure the switch is in the off position before connecting to power source and/or battery pack, picking up or carrying the tool. Carrying power tools with your finger on the switch or energising power tools that have the switch on invites accidents.
d. **Remove any adjusting key or wrench before turning the power tool on.** A wrench or a key left attached to a rotating part of the power tool may result in personal injury.
e. **Do not overreach. Keep proper footing and balance at all times.** This enables better control of the power tool in unexpected situations.
f. **Dress properly.** Do not wear loose clothing or jewellery. Keep your hair, clothing and gloves away from moving parts. Loose clothes, jewellery or long hair can be caught in moving parts.

4) POWER TOOL USE AND CARE

a. **Do not force the power tool. Use the correct power tool for your application.** The correct power tool will do the job better and safer at the rate for which it was designed.
b. **Do not use the power tool if the switch does not turn it on and off.** Any power tool that cannot be controlled with the switch is dangerous and must be repaired.
c. **Disconnect the plug from the power source and/or the battery pack from the power tool before making any adjustments, changing accessories, or storing power tools.** Such preventive safety measures reduce the risk of starting the power tool accidentally.
d. **Store idle power tools out of the reach of children and do not allow persons unfamiliar with the power tool or these instructions to operate the power tool.** Power tools are dangerous in the hands of untrained users.
e. **Maintain power tools. Check for misalignment or binding of moving parts, breakage of parts and any other condition that may affect the power tool's operation. If damaged, have the power tool repaired before use.** Many accidents are caused by poorly maintained power tools.
f. **The electric motor has been designed for 230V and 240V only.** Always check that the power supply corresponds to the voltage on the rating plate.

5) SERVICE

a. **Have your power tool serviced by a qualified repair person using only identical replacement parts.** This will ensure that the safety of the power tool is maintained.

Additional Safety Warnings for Pressure Washers

⚠ **WARNING: In order to avoid a hazard due to inadvertent resetting of the thermal cut-out,** this appliance must not be supplied through an external switching device, such as a timer, or connected to a circuit that is regularly switched on and off by the utility.

a. **High pressure jets can be dangerous if subject to misuse.** The jet must not be directed at animals, persons, live electrical equipment or the machine itself.
b. **This machine has been designed for use with the cleaning agent supplied or recommended by the manufacturer.** The use of other cleaning agents or chemicals may adversely affect the safety of the machine.
c. **During use of high pressure cleaners, aerosols may be formed.** Inhalation of aerosols can be hazardous to health.
d. **Do not use the machine within range of persons unless they wear protective clothing.**
e. **Do not direct the jet against yourself or others in order to clean clothes or foot-wear.**
f. **Risk of explosion** - Do not spray flammable liquids.
g. **High pressure cleaners shall not be used by children or untrained personnel.**

h. **High pressure hoses, fittings and couplings are important for the safety of the machine. Use only hoses, fittings and couplings recommended by the manufacturer.**
i. **To ensure machine safety, use only original spare parts from the manufacturer or approved by the manufacturer**.
j. **Water that has flowed through back-flow preventer is considered to be nonpotable.**
k. **Never put your hand, fingers or body directly in front of the spray nozzle**.
l. **Keep pets, children and bystanders a safe distance away from your work area. A minimum of 15m is recommended**

WARNING: Do not direct the jet against yourself or others in order to clean clothes or foot-wear.

WARNING: Risk of explosion – Do not spray flammable liquids.

m. **Do not use the machine if a supply cord or important parts of the machine are damaged,** e.g. safety devices, high pressure hoses, trigger gun.
n. **Do not operate the product while under the influence of drugs, alcohol, or any medication.**
o. **Only operate the tool during broad daylight or with adequate artificial light.**
p. **Never clean sensitive surfaces or parts like motors or bearings.** The high-pressure jet will damage sensitive parts or water will penetrate where it should not.
q. **Damage may occur if pressure washer nozzle is held too close to the cleaning surface.** Damage caused will not be covered under warranty.
r. **Always trial the pressure washer cleaner and selected nozzle on an inconspicuous part of the product to be cleaned.**
s. **NEVER use hot, dirty or chemically infested water as it will damage your pressure cleaner.** Only use cold clean water.
t. **The warnings, cautions, and instructions in this instruction manual cannot cover all possible conditions and situations that may occur.** It must be understood by the operator that common sense and caution are factors which cannot be built into this product, but must be supplied by the operator.

WARNING: Make sure the inlet water pressure keeps between 0.01MPa and 0.4MPa.The inlet pipe should at least 5m long. Do not use the pipe if the pipe is damaged. If you want connect this machine to portable water mains, you must install a back-flow preventer in the water pipe to prevent dirty water flow back to the drinking water system.
The back-flow preventer shall comply with EN 60335-2-79 ANNEX AA.
WARNING: Observe a distance of at least 30cm when using the jet to clean painted surfaces to avoid damaging paintwork.

u. **Children should be adequately supervised to ensure they do not play with the product.**
v. **Check the power cord and the extension cord for damage before each use.** If the power cord or the extension cord is damaged, it must be replaced by the manufacturer, its service agent, or similarly qualified persons in order to avoid a hazard. Depending on the application, shielded nozzles can be used for high pressure cleaning, which will reduce the emission of hydrous aerosols dramatically. However, not all applications allow the use of such a device. If shielded nozzles are not applicable for the protection against aerosols, a respiratory mask of class FFP 2 or equivalent may be needed, depending on the cleaning environment.

EXTENSION CORDS AND REELS

WARNING: Inadequate extension cords can be dangerous

a. Use of an extension cord with this product is NOT RECOMMENDED. If you must use an extension cord, use only extension cords that are intended for outdoor use. These cords are identified by a marking "ACCEPTABLE FOR USE WITH OUTDOOR APPLIANCES, STORE INDOORS WHILE NOT IN USE." Use only extension cords having an electrical rating not less than the rating of the product. Examine extension cord before use. DO NOT USE DAMAGED EXTENSION CORDS! If damaged never use always replace.
b. Inadequate extension cords can be dangerous. If an extension cord is used, it shall be suitable for outdoor use, and the connection has to be kept dry and off the ground. It is recommended that this is accomplished by means of a cord reel which keeps the socket at least 60 mm above the ground.
c. Always disconnect the extension cord from the power point before disconnecting the product from the extension cord.
d. **WARNING –** To reduce the risk of electrocution, keep all connections dry and off the ground. Do not touch the plug with wet hands.
e. Do not use the appliance if a supply cord or important parts of the appliance are damaged, e.g. safety devices, high pressure hoses, trigger gun.
f. If an extension cord is used, the plug and socket must be of watertight construction.
g. Remove the plug from the socket-outlet during cleaning or maintenance and when replacing parts or converting the machine to another function.

Description of Symbols

The following symbols could be shown on the tool:

	Read the instruction manual before use. Failure to follow the warnings and instructions may result in electric shock, fire and/or serious injury.		**Risk of Explosion**
	Warning		**High-pressure water can be dangerous if used incorrectly. High-pressure water jets must not be directed at people, electrical equipment or the washer itself.**
	Machine not Suitable for connection to the potable water mains	L_{WA} 93 dB	**Sound Power Level**
A	**Amps**	~	**Alternating Current**
W	**Watts**	**V**	**Volts**
Mpa	**Mega-pascals**	**Hz**	**Hertz**
psi	**Pounds per square inch of pressure**	**Kg**	**Kilograms**
	Regulatory Compliance Mark (RCM). Product meets applicable regulatory requirements		

INTENDED USE

The electric High Pressure Washers are intended only for outdoor use. For safety reasons, the product must be adequately controlled by a two-handed operation.
The K16253 is designed for home or domestic use. It is intended to clean machines, vehicles, buildings, floors, tools, façades, terraces, floors, and concrete walkways by removal of stubborn dirt using clean water with or without cleaning detergent.
The product should be used in well-illuminated conditions.
Do not use the product for any other purpose.

Unpacking

Carefully unpack your pressure washer. Dispose of all packing material in accordance with your local council authority.
Check for loose parts, missing parts or damaged parts. Modifications must not be carried out or accessories added.

K16253

What's in the Box

1x Pressure Washer 2100W - K16253
1x 8M High Pressure Hose
1x Variable Pressure Trigger Gun
1x 1/4" Quick Connect Lance for Accessories
1x 1/4" Quick Connect Turbo Nozzle
1 x 1/4" Quick Connect Red Nozzle = 0°
1 x 1/4" Quick Connect Green Nozzle = 25°
1 x 1/4" Quick Connect White Nozzle = 40°
1x 1/4" Quick Connect gun & hose adaptor
1x Water Inlet Filter Connector
1x Karcher Accessory Adaptor
1x Soap Dispenser
1x Onboard Gun & Lance Storage attachment
1x Handle & High Pressure Hose attachment
1x Power Cord attachment
1x Onboard Nozzle Storage (Preinstalled)
1x Cleaning Needle
2x Screws
1x Manual

Tools Required

1x Phillips head screwdriver (Not included).

Assembly

CONNECTING LANCE TO HIGH PRESSURE GUN

WARNING: Ensure the Pressure Washer is switched OFF and disconnected from the power socket before performing any assembly, adjustments or maintenance

Note: Always ensure that all connections are clean and free of any dust, dirt or debris before assembling any components of the Pressure Washer.

1. The lance and gun comes in 2 pieces;
   - 1 piece Pressure Gun
   - 1 piece Quick Connect lance
2. Connect the pressure gun to the Quick Connect lance by aligning and inserting the quick connect lance into the end of the pressure gun (Fig.1).
3. Push in the extension lance and turn clockwise, until locked into position (Fig.2).
4. Finally select the nozzle you require for the job at hand; adjustable nozzle, turbo nozzle or the black chemical nozzle.

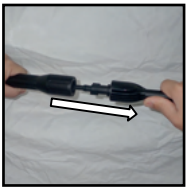
Fig.1

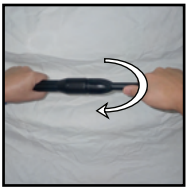
Fig.2

CONNECTING GUN TO PRESSURE HOSE

The K16253 has 2 options of connecting the pressure hose.

OPTION 1 PERMANENT FIX (M22)

1. Unwind the high pressure hose slightly, so you have some slack.
2. Aligning and inserting the high pressure hose into the bottom of the high pressure gun (Fig.3).
3. Rotate the locking nut in a clockwise direction, until they are securely tightened (Fig.4).

Fig.3

Fig.4

OPTION 2 QUICK CONNECT (SWIVEL)

1. Unwind the high pressure hose slightly, so you have some slack.
2. Aligning and quick connect adaptor with the end of the high pressure hose (Fig.5).
3. Using an aid of a 22mm Spanner (not supplied), rotate the locking nut in a clockwise direction, until they are securely tightened (Fig.6).

Fig.5

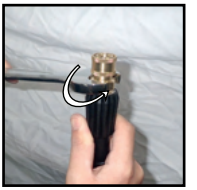

Fig.6

4. Aligning and quick connect adaptor with the bottom of the high pressure gun (Fig.7).
5. Rotate the locking nut in a clockwise direction, until they are securely tightened (Fig.8).
6. The quick connect on the hose now can be fitted to the quick connect of the gun by pulling the female coupler back, which is located on the high pressure hose and feed the male fitting located on the bottom of the high pressure gun together (Fig.9).

Fig.7

Fig.8

Fig.9

Nozzle Selection Guide and Installation

Turbo Nozzle: This nozzle outputs a high pressure vortex style circular spray pattern providing greater cleaning efficiency over large surface areas, ideal for timber decks, driveways etc.

Karcher Accessory Adaptor: This adaptor allows you to connect most Karcher accessories. Easily connects directly to the gun (NOT end of lance).

Quick Connect Gun & Hose Swivel Adaptor Kit: This kit upgrades a standard M22 gun & hose fitment to a 1/4" quick connect system, for a much more efficient & quick setup/pack down. This connection also swivels & reduces hose kinks for the best user experience.
GUN - Brass M22 Female x 1/4" Male Rotating Coupling
HOSE - Brass M22 Male To 1/4" Coupler

Soap Dispenser: Is a system for applying detergent. An adjustable spray pattern (vertically or horizontally) as it throws thick foam onto your vehicle, house, fence, sidewalk, roof or other washable items. By controlling the pressure from the high pressure gun it can increase or decrease the foam output. This allows the internal agitator to create a dense foam.

0° Nozzle - RED: This nozzle delivers a pinpoint stream of pressurized water & is extremely powerful. This nozzle should only be directed at surfaces that can withstand extreme high pressure such as metal or concrete.
Note: DO NOT use this nozzle on soft materials such as timber.

25° Nozzle - GREEN: This nozzle delivers a 25° fan spray pattern of pressurized water for intense cleaning of larger areas. This nozzle should only be directed at surfaces that can withstand this kind of high pressure, e.g. timber decking.

40° Nozzle – WHITE: This nozzle delivers a 40 degree spray pattern and a less powerful stream of water. This nozzle can cover a wide area and should be used for most general cleaning jobs.

K16253

CONNECTING PRESSURE WASHER TO CHEMICAL NOZZLE

1. Connect the 1/4" soap dispenser nozzle into the end of the 1/4" quick connect lance by pulling back on the brass
1. connector (Fig.10).
2. Push the 1/4" soap dispenser nozzle into the brass end until you hear a click (Fig.11).

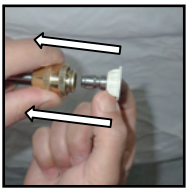
Fig.10

Fig.11

Operation

Ensure that the pressure cleaner is disconnected from the mains supply when not in use, before making changes or cleaning or leaving the machine unattended.

Never clamp your pressure cleaner to a bench or other device, IT IS A HAND HELD TOOL.
High pressure jets can be dangerous if subject to misuse. The jet must not be directed at persons, live electrical equipment or the machine itself.

WARNING: Never place your hands, feet or any body part in from of an operating nozzle. Never grasp the high pressure hose fittings during Pressure Washer operation. Never attempt to attach, remove hoses, pressure guns, lances or nozzles or hose fittings while the Pressure Washer is pressurized.
Always switch off the mains disconnecting switch when leaving the machine unattended.
CAUTION: The danger of the reaction force and the sudden torque on the spray assembly when operation the trigger gun.

AUTOMATIC ON/OFF:

The motor on this pressure washer does not run continuously. It only runs when the trigger of the spray gun is squeezed. After following the start up procedures in this manual, turn the pressure washer ON and squeeze the trigger for activation. See the section of this manual entitled "Operating Instructions" for further details on this feature.

BLEEDING THE GUN:

It is very important to bleed the gun before using the pressure washer. Squeeze the trigger to allow any air that is trapped inside of the unit and hose to escape. Continue to squeeze trigger until a steady stream of water comes from the nozzle (This process may take up to 2 minutes). See the section of this manual entitled "Operating Instructions" for further details on this process.

STARTING AND STOPPING

Caution: Always turn the Pressure Washer OFF & lock the pressure gun trigger before attempting to change the pressure nozzles.

1. Located on the front face of the Pressure Washer is the ON/OFF switch.
2. To turn ON the Pressure Washer, you must rotate the ON/OFF switch to the On (I) position.
3. To turn OFF the Pressure Washer, you must rotate the ON/OFF switch to the OFF (O) position.

Caution: Always ensure your water supply is connected and turned ON prior to switching ON the Pressure Washer.
Operating the Pressure Washer without water could damage the seals and pump.

4. After all connections have been made correctly & checked, plug in the power cord into a power socket then turn the switch on your power point "ON".
5. Turn ON the electric Pressure Washer by rotating the ON/OFF switch to the On (I) position.
6. Pull the pressure gun trigger and the Pressure Washer is now operational.

K16253

GUN SAFETY LOCK

Whenever you use the high pressure washer, we suggest you grip the in the right position, with one hand on the handle and the other on the lance, When you stop the machine it is necessary to use the safety lock placed on the gun in order to avoid accidental.

ATTACHING SOAP DISPENSER

1. Insert the metal end of the soap dispenser into the opening of the 1/4" quick connect lance.
2. Pull back the coupler on the 1/4" quick connect lance (Fig.12) & push soap dispenser into the brass fitting. Ensure both are secured properly. You should hear a click when connected correctly (Fig.13).

Fig.12

Fig.13

CONNECTING PRESSURE WASHER TO MAINS WATER

WARNING: To prevent damage of the surface you are cleaning & to select the appropriate nozzle for your application, always start cleaning your surface by using the lowest pressure possible. Start cleaning well away from your surface to ascertain if the nozzle type & distance from surface is appropriate for your cleaning needs.

Note: Always test the selected nozzle/cleaning distance in an inconspicuous spot in case of any damage to the surface is experienced. After testing the cleaning nozzle selected/distance of cleaning you can change nozzles & cleaning distance as required based on your cleaning application.

Note: Any damage caused to your surface due to pressure cleaning will not be covered by Kincrome.
Your Pressure Washer comes complete with assorted cleaning nozzles and has a detergent dispenser.
Each nozzle delivers a specific cleaning spray pattern for a particular cleaning application. The size & shape of the cleaning nozzles determine the Pressure Washers output capacity. The different output capacities will deliver different cleaning results.

Note: This Pressure Washer, doesn't come supplied with an inlet hose, you must purchase one at your own expense from your local hardware store. Depending on the hose purchased, you will also need to purchase an inlet coupler and an additional inlet hose adaptor. The hose should be a reinforced wall hose, to ensure the hose does not collapse, when the Pressure Washer is being used. It is recommended that the minimum inside diameter of this hose should be no less than 19mm (3/4").

1. Once you have your inlet hose, you must connect a male hose adaptor to your mains water tap or storage device.
   Make sure you have screwed the male hose adaptor securely inlet filter.
2. Once installed, you must fit a female inlet coupler (not supplied) to either end of your inlet hose. Ensure they are firmly secured to your inlet hose.

Note: Some hoses have adaptors pre-installed when purchased.

3. Grab one end of your hose, and pull back the female inlet coupler and feed onto the male inlet adaptor located on your mains water tap. They should click into position.
   With the free end of your hose, feed the remaining female inlet coupler onto the inlet filter adaptor on the Pressure Washer.
   Your Pressure Washer is now ready to receive water!
   Remove the inlet hose, repeat the above in reverse.

K16253

Maintenance and Storage (Refer to Product Specifications for Maintenance QR codes)

Ensure that the pressure cleaner is disconnected from the mains supply when not in use, before making changes or cleaning.

CLEANING NOZZLES

Using included tip cleaner, or an unfolded paper clip, insert wire into the nozzle hole and move back and forth until debris is dislodged. Remove additional debris by back-flushing water through the nozzle. To do this, place end of a garden hose (with water running) to the end of nozzle for 30-60 seconds.

STORAGE

The machine should be stored in a frost-free environment.
After long-term storage without operation, it is possible to form scales inside the machine making it hard to start again. In such conditions it is recommended to turn off and disconnect the power supply and rotate the motor by hand several times so as to avoid excessive current draw on the motor and the power supply.

REPAIRING THE PRESSURE WASHER

There are no user serviceable parts except as outlined in the exploded views. Only trained, licensed and certified repair personnel should attempt any repairs or replacing of parts. Any modifications to this Pressure Washer, except those performed by the manufacturer, or their design, will void all warranties both written and implied.

CARING FOR THE ENVIRONMENT

When a Pressure Washer is no longer usable it should not be disposed of with household waste, but in an environmentally friendly way. Please recycle where facilities exist. Check with your local council authority for recycling advice.
Recycling packaging reduces the need for landfill and raw materials. Reuse of recycled material decreases pollution in the environment. Please recycle packaging where facilities exist. Check with your local council authority for recycling advice.

K16253

Troubleshooting

Symptom	Cause	Remedy
Motor Does not Start.	Machine not plugged in. Defective mains power socket. The power cord or extension cord is damaged. Internal overheating protection activated.	Plug in machine. Try another socket. Inspect the power cord and extension cord for damage. Allow machine to cool for 5 minutes.
Motor Shuts Down.	Internal overheating protection activated. Max. pressure has been reached. Nozzles Blocked.	Allow machine to cool for 5 minutes. Pull the gun trigger to release pressure. Clean nozzles.
Erratic Working Pressure.	Pump sucking air. Valves dirty, worn out or stuck. Pump seals worn out. Irregular water supply. Crimps or kinks in water hose.	Check all fittings and hose have a good connection. Contact Kincrome customer service. Ensure water supply meets specifications.
Fluctuation in Pressure or Motor Runs but there is no Pressure.	Freezing. Water not reaching the water inlet. Filter Clogged. Nozzle Clogged. Inlet hose is damaged or Kinked.	Allow pump, water hose or accessories to defrost. Connect to a different mains supply Clean or replace filter. Clean Nozzles. Ensure hose is free of damage and Kinks.
Weak Pressure but Continuous Water Stream.	Worn Nozzles. Worn ON/OFF valve.	Replace Nozzles. Contact Kincrome Customer Service.
Starts and Stops when not being used.	Leak in the pump, nozzles Gun & Lance or Hose.	Check and tighten all fittings.

K16253

Wiring Diagram

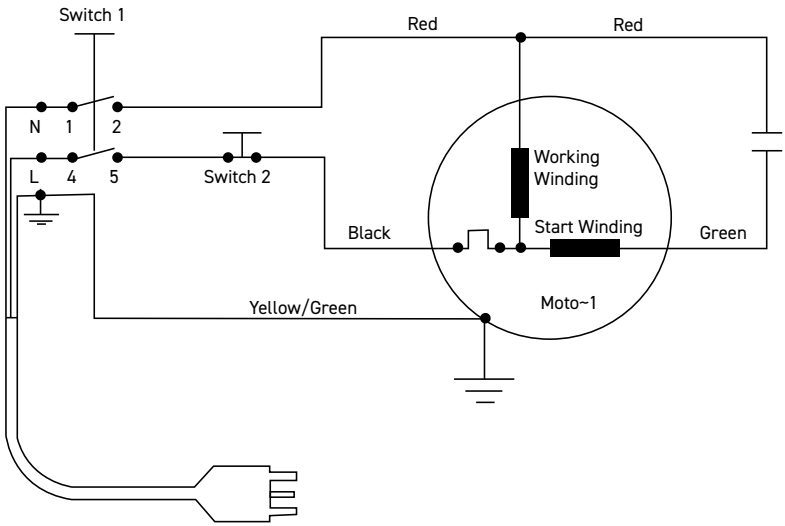

K16253

Exploded Diagram

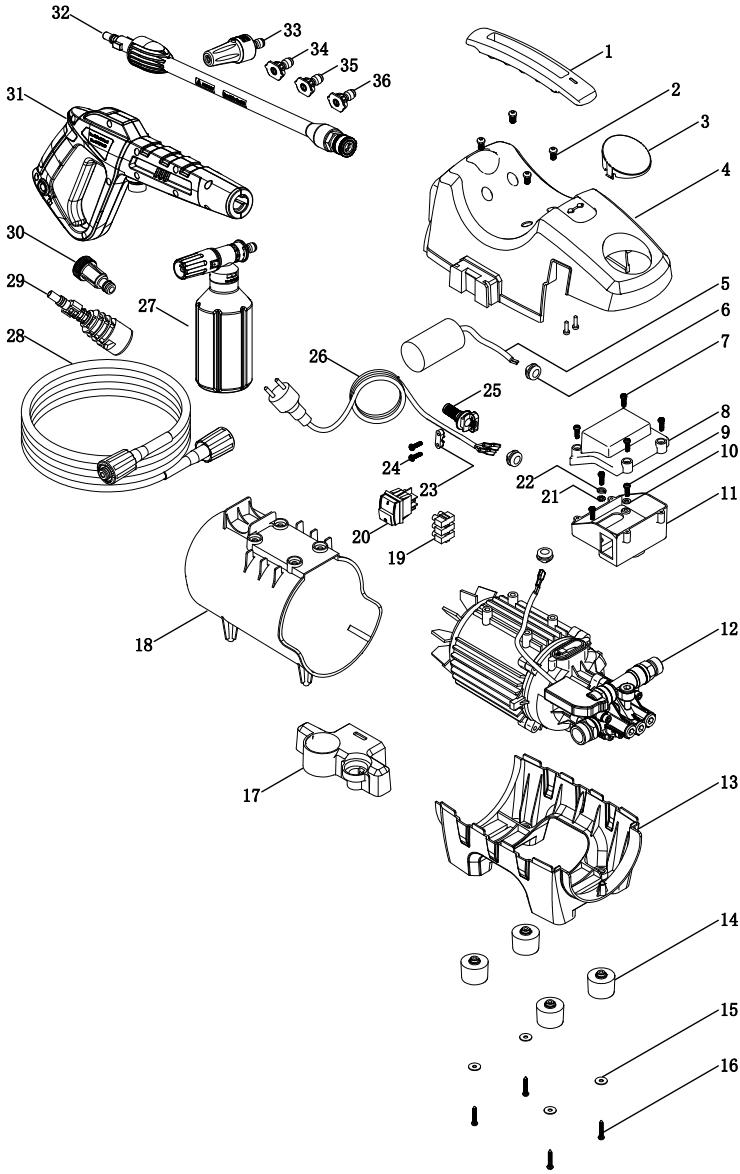

OFFICE CONTACT DETAILS

Phone: 1300 657 528 Email: enquiries@kincrome.com.au Website: www.kincrome.com.au

WARRANTY

5 YEAR WARRANTY

3 YEAR STANDARD
+2 FURTHER YEARS WHEN
REGISTERED ONLINE

Our goods and services come with guarantees that cannot be excluded under the Australian Consumer Law. For major failures with the service, you are entitled: -to cancel your service contract with us; and -to a refund for the unused portion, or to compensation for its reduced value. You are also entitled to choose a refund or replacement for major failures with goods. If a failure with the goods or a service does not amount to a major failure, you are entitled to have the failure rectified in a reasonable time. If this is not done you are entitled to a refund for the goods and to cancel the contract for the service and obtain a refund of any unused portion. You are also entitled to be compensated for any other reasonably foreseeable loss or damage from a failure in the goods or service'. Kincrome Australia Pty Ltd of 3 Lakeview Drive, Caribbean Park, Scoresby, Victoria (Tel 1300 657 528) also provides the Kincrome Lifetime Guarantee and 12-Month Warranty (Kincrome Express Warranties) in respect of some of its products. If a product is covered by a Kincrome Express Warranty and it has materials or workmanship defects (other than defects caused by abnormal or non warranted use) which are covered under the terms of the relevant Kincrome Express Warranty, you can, at your cost, send the product to the above address for repair or replacement. Your rights under a Kincrome Express Warranty are in addition to any other rights you have under the Australian Consumer Law or other applicable laws. For further details and terms please check our product guide, visit www.kincrome.com.au or call us. Every effort is made to ensure advertised stock is available, but due to factors beyond the control of Kincrome Australia Pty. Ltd, not all products advertised in this catalogue may be available at all stores. Kincrome Australia Pty. Ltd. reserves the right to correct printing errors. All sizes shown are approximate only. Accessories shown do not come with the product unless otherwise specified. Due to printing process, colours in this catalogue may vary slightly to actual item. E. & O. E.© Copyright 2022. Reproduction in whole or in part is prohibited without written approval.

22
PAP