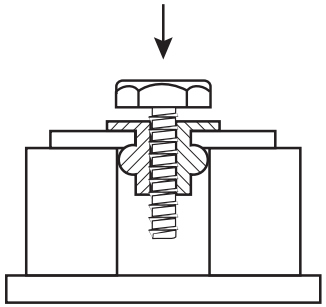

PUSH OUT

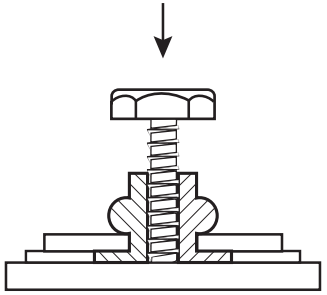

PULL OUT

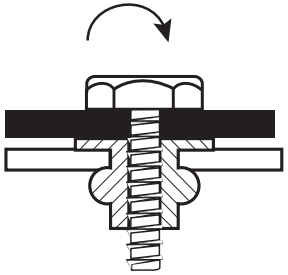

TORQUE TO TURN

## Steel Rivet Nuts Load Capacity

| Part Number | Thread Size / Plate Thickness | Push out (Kgf) | Pull out (Kgf) | Torque to Turn (Kgf.cm) |
|---|---|---|---|---|
| K4903 | M3 x 0.5 / 1.0mm | 120 | 360 | 25 |
| K4904 | M4 x 0.7 / 2.0mm | 215 | 830 | 55 |
| K4905 | M5 x 0.8 / 2.0mm | 310 | 1090 | 80 |
| K4906 | M6 x 1.0 / 3.0mm | 540 | 1630 | 130 |
| K4908 | M8 x 1.25 / 3.0mm | 700 | 1510 | 170 |
| K4910 | M10 x 1.5 / 3.0mm | 1100 | 2200 | 350 |

1 Kgf.cm = 0.098 N.m
Kgf = 9.807N

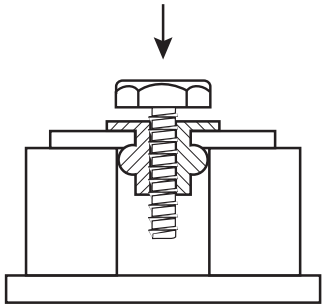

PUSH OUT

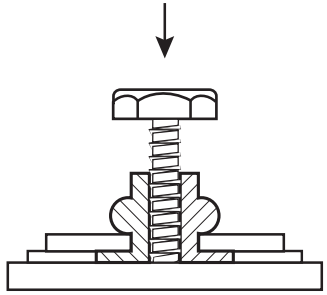

PULL OUT

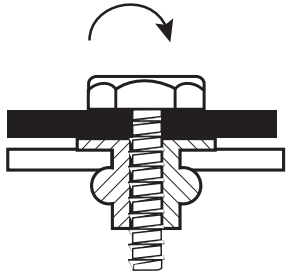

TORQUE TO TURN

## Aluminium Rivet Nuts Load Capacity

| Part Number | Thread Size / Plate Thickness | Push out (Kgf) | Pull out (Kgf) | Torque to Turn (Kgf.cm) |
|---|---|---|---|---|
| K4953 | M3 x 0.5 / 1.0mm | 90 | 200 | 20 |
| K4954 | M4 x 0.7 / 2.0mm | 100 | 400 | 40 |
| K4955 | M5 x 0.8 / 2.0mm | 100 | 500 | 60 |
| K4956 | M6 x 1.0 / 3.0mm | 200 | 800 | 100 |
| K4958 | M8 x 1.25 / 2.0mm | 200 | 1000 | 200 |
| K4951 | M10 x 1.5 / 2.0mm | 300 | 1200 | 400 |

1 Kgf.cm = 0.098 N.m
Kgf = 9.807N