KINCROME

Hydraulic Garage Jacks
1,100kg - 2,800kg

K12162 - 2000kg Hydraulic Garage Jack
K12163 - 1450kg Hydraulic Aluminium Body Racing Jack
K12164 - 1100kg Hydraulic Garage Jack Super Low Profile
K12165 - 2000kg Hydraulic Garage Jack Super Low Profile
K12167 - 2800kg Hydraulic Garage Jack
K12170 - 2250kg Hydraulic Garage Jack

ED7 MAY 2026

Caution: Do not allow persons to operate or assemble this jack until they have read this manual and developed a thorough understanding on how the jack works

Specifications

K12162

Scan QR code for troubleshooting, maintenance & product information

Part No.	**K12162**
Working Load Limit	2,000kg
Height Lowered	115mm
Height Raised	460mm
Head Cap	110mm
Handle Length	1360mm
Net Weight	31.5kg

K12163

Scan QR code for troubleshooting, maintenance & product information

Part No.	**K12163**
Working Load Limit	1,450kg
Height Lowered	85mm
Height Raised	466mm
Head Cap	100mm
Handle Length	1360mm
Net Weight	26.8kg

K12164

Scan QR code for troubleshooting, maintenance & product information

Part No.	**K12164**
Working Load Limit	1,100kg
Height Lowered	68mm
Height Raised	615mm
Head Cap	100mm
Handle Length	1360mm
Net Weight	44.2kg

K12165

Scan QR code for troubleshooting, maintenance & product information

Part No.	**K12165**
Working Load Limit	2,000kg
Height Lowered	90mm
Height Raised	520mm
Head Cap	110mm
Handle Length	1420mm
Net Weight	40kg

K12167

Scan QR code for troubleshooting, maintenance & product information

Part No.	**K12167**
Working Load Limit	2,800kg
Height Lowered	107mm
Height Raised	520mm
Head Cap	110mm
Handle Length	1420mm
Net Weight	44.5kg

K12170

Scan QR code for troubleshooting, maintenance & product information

Part No.	**K12170**
Working Load Limit	2,250kg
Height Lowered	115mm
Height Raised	460mm
Head Cap	110mm
Handle Length	1360mm
Net Weight	31.5kg

Know Your Product

Important Safety Instructions

Save all warnings and instructions for future reference.
WARNING! Read all safety warnings and all instructions. Failure to follow the warnings and instructions may result in serious injury and/or death.

The use of a vehicle jack has inherent dangers to avoid risk of personal injury or property damage make sure you are fully aware of the operating instructions for this product, the recommendations in the vehicle owners manual for jacking of your vehicle prior to lifting the vehicle. Do not exceed maximum lifting capacity of this jack. This jack is intended for automotive use only. Be aware that large or heavy vehicles may exceed jack's stated capacity check vehicle owners manual or contact the vehicle manufacturer. Do not use for any other purpose except the raising and lowering of vehicles, never use to raise any structure or building, Do not lift any human and never ride on jack.

PERSONAL SAFETY

1. **Stay alert.** Watch what you are doing and use common sense when operating the jack. Do not use the jack while tired or under the influence of drugs, alcohol, or medication. A moment of inattention while operating the jack increases the risk of injury to persons.
2. **Dress properly. Do not wear loose clothing or jewellery. Contain long hair. Keep hair, clothing, and gloves away from moving parts.** Loose clothes, jewellery, or long hair increases the risk of injury to persons as a result of being caught in moving parts.
3. **Do not overreach. Keep proper footing and balance at all times.** Proper footing and balance enables better control of the jack in unexpected situations.
4. **Use safety equipment.** A dust mask, non-skid safety shoes and a hard hat must be used for the applicable conditions.

PREPARING WORK AREA

Before using jack to lift vehicle, it is important to prepare work area properly. Follow this procedure each time the jack is used to help prevent property damage and or serious injury.

1. **Plan location of jack beneath vehicle, making sure jack will be contacting only a jack support area of vehicle.**
2. **Clear obstructions from work area.** Working in tight or cluttered work areas is dangerous.
3. **Clear children and others from work area before moving or lifting vehicle.** Another adult should be nearby for extra safety and assistance but must be clear of vehicle as it is moved or lifted.
4. **Conduct a pre-operational check of the equipment. Thoroughly inspect jack for damage or wear before each use.**
5. **Briefly test operation of unvehicled jack before using to lift any vehicle.** If jack is damaged or is malfunctioning **DO NOT LIFT ANY VEHICLE** until the problem is corrected.
6. **The Vehicle manufacturer's owner's manual should be consulted prior to the lifting of the vehicle.** It will advise safety precautions, jacking procedure, vehicle weight, recommended jack type, and location of jack support areas on vehicle. **NEVER EXCEED WORKING VEHICLE LIMIT OF JACK**.
7. **The hydraulic vehicle jack should be used for lifting and lowering only; the raised vehicle should be supported on suitably rated vehicle support stands, and the hydraulic trolley jack removed, prior to commencement of work on the vehicle.** Read and understand jack stands manufacturer's instructions and safety information before use and before lifting the vehicle with this jack.
8. **Be sure jack and vehicle are on solid, level ground such as paved or concrete driveway or garage floor. The jack should be used on level firm ground wherever possible. Uneven or sloped surfaces create hazardous working conditions and dangerously impede the function of the jack. Ensure the jack is free to roll during lifting and lowering.**
9. **No person should remain in a vehicle that is being lifted. No person should enter a vehicle which is supported by a jack or by vehicle support stands. No person should lean into a vehicle which is supported by a jack or by vehicle support stands.**
10. **No person should place any part of their body under a vehicle that it supported only by a trolley jack.**
11. **With vehicle in proper position, set vehicle's parking brake or emergency brake and put gear-shift in park (manual transmissions should be placed in 1st gear). Turn VEHICLE IGNITION OFF AND TO THE "LOCK" POSITION making sure steering wheel locks.**

12. **It is recommended that the unlifted wheels of the vehicle be chocked. Do not rely on vehicle transmission or brakes to hold vehicle in position. Chock all wheels of vehicle not being lifted off the ground to prevent vehicle rolling.**
    Using wedge-shaped blocks that tyre cannot roll over, position one chock tight against the tyre in both forward and reverse rolling paths.
13. **The vehicle should be centrally located on the head cap**. Off centre vehicles can be unstable.

Remove rubber cap before jacking rounded surfaces. NEVER use a rubber cap on rounded axles or other uneven surfaces.
Using a the rubber cap on such surfaces significantly increases the risk of the jack slipping, potentially leading to:

- Vehicle falling off the jack.
- Damage to the vehicle.
- Serious injury or death.

Instruction Manual Images

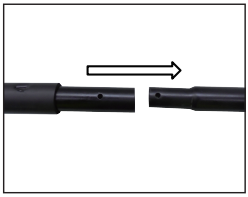
fig 1.

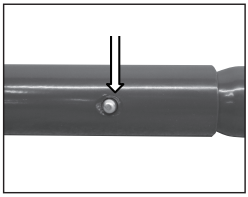
fig 2.

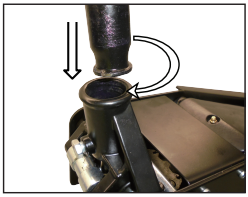
fig 3.

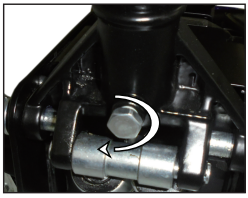
fig 4.

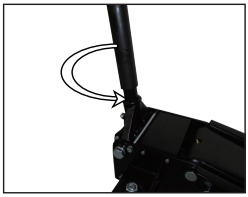
fig 5.

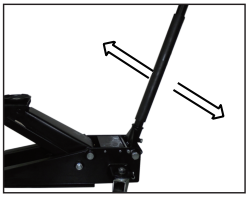
fig 6.

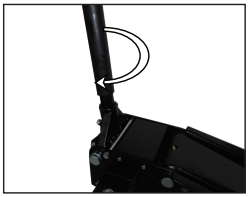
fig 7.

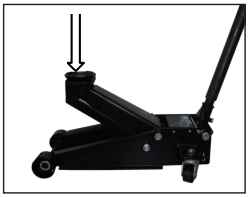
fig 8.

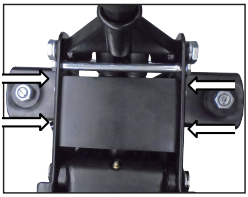
fig 9.

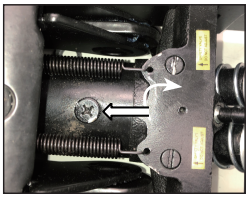
fig 10.

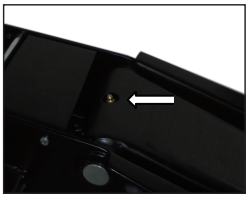
fig 11.

WARNING

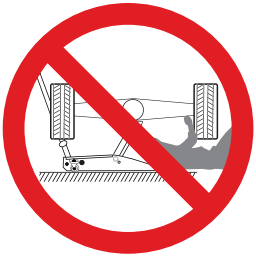

DEATH OR INJURY FROM INCORRECT USE

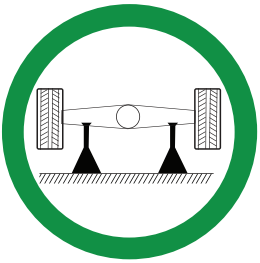

USE TWO SUPPORT STANDS

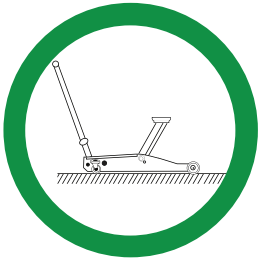

FLAT HARD LEVEL GROUND

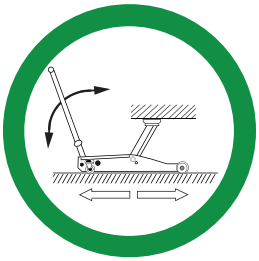

FREE TO ROLL DURING LIFTING AND LOWERING

Refer To Vehicle Manufacturer's Manual For Instructions

Unpacking and Assembling Jack

UNPACKING

Unpack all the components from the box.

When unpacking the garage jack carefully inspect for any damage that may have occurred during transit.

Check for loose parts, missing parts or damaged parts.

1. Ensure all packaging materials are disposed of as per your local council guide lines.
2. Modifications must not be carried out or accessories added.

Assembling the Handle Assembly

1. Ensuring the locking holes are aligned, insert the upper handle into the lower handle (fig.1).
2. Insert the bolt and tighten in a clockwise direction (where fitted) (fig .2).
3. Slide the handle assembly into the handle base. The handle assembly will be required to be slowly twisted for the hex shaped drive of the release valve to engaged into the handle assembly slot (fig.3).
4. Fasten the locking screw in the handle base to ensure the handle assembly is safely secured (fig.4).
5. Remove the safety clip that secures the handle base in transit.

Bleeding / Venting Trapped Air

Note: Before first use, the hydraulic ram may need to be purged. Some air may intrude in the hydraulic system due to movement during shipping. Air bubbles can become trapped inside the hydraulic system, thereby reducing the efficiency of the Jack.

1. Use the handle assembly to twist the release valve 1-1/2 turns counter-clockwise (fig.5).
2. Rapidly pump the handle assembly 10 to 20 times to purge air from the hydraulic system (fig.6).
3. Use the handle assembly to twist the release valve clockwise until tight (fig.7). Do not over-tighten.

Operation

Your Kincrome Garage Jack is designed to be used with a specific handle length and head cap size. See below for details.

Part Number	Handle	Head Cap
K12162	1360mm	110mm
K12163	1360mm	100mm
K12164	1360mm	100mm
K12165	1420mm	110mm
K12167	1420mm	110mm
K12170	1360mm	110mm

Before first using jack carry out the following preparation:

1. **Check oil level -** Open release valve with the handle assembly (fig.5) not more than two twists and press down on head cap (fig.8) to ensure lifting arm is fully down.
2. Remove the 4 screws fixing the pump cover to the jack and remove the pump cover (fig.9).
3. Remove fluid filler plug (fig.10). Hydraulic fluid level should be visible at the oil filler hole approx 12 mm below fluid filler, top as required (refer to the “Maintenance and Storage” (pg 8).
4. **Bleed system** - refer to the above “Bleeding/Venting Trapped Air” (pg 7).
5. **Lubricate** - The Hydraulic Trolley Jack does not require lubricating before first use. It is recommended to periodically grease the wheels and lifting arm pivot via the fitted grease nipple.

RAISING THE LIFTING ARM

WARNING!: Do not over load this jack's maximum capacity, refer to the specification section (pg 2) for the Max Working Limits.
WARNING!: The vehicle manufacturer's owner's manual should be consulted for the correct lift points prior to the lifting of the vehicle. Place vehicle in park, with hand brake on and wheel securely chocked to prevent inadvertent vehicle movement.

Remove rubber cap before jacking rounded surfaces. NEVER use a rubber cap on rounded axles or other uneven surfaces.
Using a the rubber cap on such surfaces significantly increases the risk of the jack slipping, potentially leading to:

- Vehicle falling off the jack.
- Damage to the vehicle.
- Serious injury or death.

Only use Rubber Cap on flat, level surfaces. Rubber caps can be safely used on flat, designated jacking points on the vehicle's chassis or frame.

1. Close release valve by twisting the handle assembly clockwise until firm resistance is felt (fig.5).
2. Inspect position of head cap beneath support area, making sure it is centred and properly engaging support area.
3. Slowly pump the handle assembly until the head cap contact the vehicle's lift point.
4. To lift, continue pumping until vehicle reaches desired height. Pay attention to head cap position as vehicle is being raised to be sure there is no danger of support area slipping off or lifting from the head cap.
5. Place jack stands (always use in pairs) under vehicle support areas.
6. SLOWLY twist jack handle assembly counter-clockwise (fig 5.) to ease vehicle down onto jack stands.

Working on Vehicle

Any vehicle being supported by a jack or jack stands creates a potentially hazardous working environment.
Do not move or roll a jack that is supporting a vehicle. Never place any part of your body beneath a vehicle supported by a jack.
Be careful of forces applied to vehicle such as torque on a nut or bolt. These forces could cause vehicle to become unstable on jack stands if they are not properly placed. Do not turn on the vehicle's ignition or attempt to start any vehicle supported by a jack or jack stands.

LOWERING THE LIFTING ARM

Caution!: Make certain that all personnel are clear of the vehicle before lowering. Control the rate of descent of the vehicle at all times. The more you open the release valve, the faster the vechile descends.

1. Raise vehicle high enough to clear the jack stands, then carefully remove jack stands.
2. Slowly twist the handle assembly counter-clockwise (fig.5) until the jack just begins to lower.
3. Carefully control speed of descending vehicle. Lowering a vehicle too fast can cause property damage or serious injury.
4. After removing the jack from under the vehicle, push down on the lifting arm (fig.8) to reduce the pump ram exposure to rust and contamination.
5. If the vehicle fails to lower:
   a) Use another jack to raise the vehicle high enough to reinstall jack stands.
   b) Remove the affected jack. Repeat steps 1-4.

Maintenance and Storage **(Refer to Product Specifications for Maintenance QR codes)**

LUBRICATING

Moving parts on a jack should be lubricated occasionally with a light machine oil to maintain efficient operation.
Apply oil to joints on lifting arm hinges, push rods, handle base, rear castors, front rollers (and adding grease via the grease nipple on the lifting arm (fig. 11).
Wipe away excess oil and grease with soft cloth.

MAINTAINING OIL LEVEL

Important Note:

When adding or replacing oil, always use a good grade hydraulic jack fluid. Avoid mixing types of oil. **DO NOT** use brake fluid, alcohol, glycerine, detergent, motor oil or dirty oil, Improper fluid can cause serious internal damage to a jack.

Adding Oil:

With head cap fully lowered & the Jack on level ground, remove the 4 screws and lift the pump cover (fig 9.).
Remove air vent valve (fig 10). Hydraulic fluid level should be visible at the air vent valve hole approx 12mm below air vent valve hole, do not overfill. If low, add fluid as needed then close air vent valve.

Replacing Oil:

For better performance & longevity, replace oil supply once a year. To drain oil, open air vent valve and loosen the release valve by twisting handle assembly counter-clockwise. **BE VERY CAREFUL** not to permit dirt or foreign matter to get into the system. Invert the jack over suitable container and allow oil to drain. Close release valve by twisting handle assembly clockwise, fill with good grade hydraulic jack oil close air vent valve wipe away any spilt fluid. Test the jack before lifting a vehicle.

Cleaning

The jack should be wiped clean with soft cloth only. Do not use gasoline, kerosene, or other such solvents or any abrasive cleanser as cleaning agents and solvents will cause deterioration of the hydraulic seals.

Storage

Before storage, twist handle assembly 1-1/2 twists counter-clockwise to release pressure in hydraulic cylinder.
Leave handle in this position. Store the jack level, in a clean environment preferably indoors, in a dry area to protect the jack from moisture.

Repairing the Jack

There are no user serviceable parts except as outlined in the exploded views. Only trained, licensed and certified repair personnel should attempt any repairs or replacing of parts. Any modifications to this jack, except those performed by the manufacturer, or their design, will void all warranties both written and implied.

Caring for the environment

When a jack is no longer usable it should not be disposed of with household waste, but in an environmentally friendly way. Please recycle where facilities exist. Check with your local council authority for recycling advice.

Recycling packaging reduces the need for landfill and raw materials. Reuse of recycled material decreases pollution in the environment. Please recycle packaging where facilities exist. Check with your local council authority for recycling advice.

Troubleshooting

Symptom	Cause	Remedy
Jack will not lift vehicle.	1. Release Valve is not fully closed. 2. Air Trapped in Hydraulic system. 3. Oil level too low.	1. Close Release Valve firmly. 2. Bleed system - Bleeding / Venting Trapped Air on page 7. 3. Top-up to correct level.
Jack will not hold vehicle.	1. Release valve is not fully closed. 2. Overvehicle condition. 3. Air Trapped in Hydraulic system. 4. Oil level too low. 5. Hydraulic unit malfunction.	1. Close Release Valve firmly. 2. Remedy overvehicle condition. 3. Bleed system - Bleeding / Venting Trapped Air on page 7. 4. Top-up to correct level. 5. Contact Kincrome Customer Service.
Jack will not lift smoothly or to full height.	1. Oil level low. 2. Air Trapped in Hydraulic system.	1. Top-up to correct level. 2. Bleed system - Bleeding / Venting Trapped Air on page 7.
Jack will not lower completely.	1. Release Valve not sufficiently open. 2. Reservoir overfilled.	1. Slowly open Release Valve further. 2. Check oil level.

Exploded Diagrams

K12162

NO.	DESCRIPTION	QTY	NO.	DESCRIPTION	QTY
1	Handle Tube 1	1	22	Screw	2
2	Bolt	1	23	Adjustable Plate	2
3	Handle Tube 2	1	24	Retaining Ring	2
4	Handle Sleeve	1	25	Frame	1
5	Retaining Ring	1	26	Front Wheel	2
6	Handle Socket	1	27	Flat Washer	2
7	Screw	1	28	Retaining Ring	2
8	Roller	1	29	Pump	1
9	Spindle	1	30	Spring	2
10	Tools Tray	1	31	Cotter Pin	1
11	Limiting Bar	2	32	Retaining Ring	2
12	Rubber Pad	1	33	Adaptor Rod	1
13	Lock Washer	4	34	Nut	2
14	Lock Washer	2	35	Caster	2
15	Bolt	2	36	Retaining Ring	2
16	Bolt	4	37	Lifting Arm Shaft	1
17	Lock Washer	4	38	Zerk	1
18	Bolt	4	39	Lifting Arm Assembly	1
19	Screw	4	40	Adaptor	1
20	Lock Washer	4	41	Screw	1
21	Nut	2			

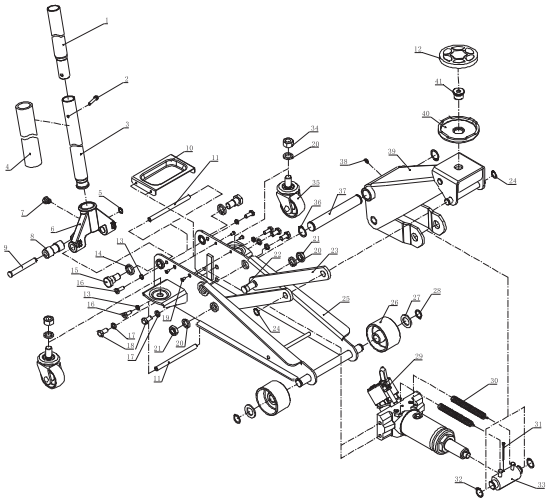

K12163

NO.	DESCRIPTION	QTY	NO.	DESCRIPTION	QTY
1	Handle Tube 1	1	26	Saddle	1
2	Handle Tube 2	1	27	Retaining Ring	2
3	Handle Seelve	1	28	Zerk	1
4	Pin	1	29	Lifting Arm Assembly	1
5	Handle Socket	1	30	Lift Arm Shaft	1
6	Spindle	1	31	Nut	2
7	Roller	1	32	Flat Washer	6
8	Retaining Ring	1	33	Adjustable Plate	2
9	Limiting Screw	1	34	Nut	2
10	Pump	1	35	Screw	6
11	Mounting Shaft	2	36	Lock Washer	6
12	Flat Washer	4	37	Bolt	2
13	Lock Washer	8	38	Front Wheel Bushing	2
14	Screw	8	39	Front Wheel	2
15	Nut	2	40	Frame	2
16	Lock Washer	2	41	Retaining Ring	2
17	Wheel Socket	2	42	Front Wheel Axle	1
18	Caster	2	43	Flat Washer	6
19	Screw	2	44	Handle	1
20	Screw	4	45	Adaptor	1
21	Limiting Bar	3	46	Screw	1
22	Screw	4	47	Rubber Pad	1
23	Spring	2	48	Lock Washer	6
24	Cotter Pin	1	49	Tools Tray	1
25	Eye Bolt	2	50	Screw	4

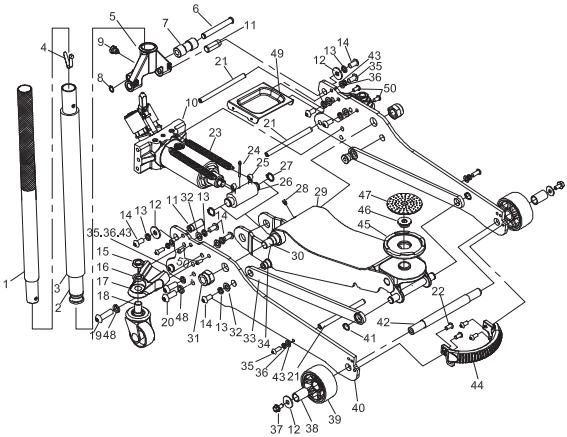

Exploded Diagrams

K12164

NO.	DESCRIPTION	QTY	NO.	DESCRIPTION	QTY
1	Handle Tube 1	1	25	Nut	2
2	Bolt	1	26	Frame	1
3	Handle Tube 2	1	27	Screw	2
4	Handle Sleeve	1	28	Right Adjustable Plate	1
5	Retaining Ring	2	29	Retaining Ring	2
6	Retaining Ring	1	30	Flat Washer	2
7	Foot Pedal	1	31	Front Wheel	2
8	Spindle	1	32	Tools Tray	1
9	Roller	1	33	Screw	4
10	Lock Washer	1	34	Left Adjustable Plate	1
11	Bolt	1	35	Zerk	1
12	Handle Socket	1	36	Lift Arm Assembly	1
13	Bolt	1	37	Lift Arm Shaft	1
14	Limiting Bar	2	38	Saddle Screw	1
15	Spring	1	39	Saddle	1
16	Rubber Pad	1	40	Retaining Ring	2
17	Lock Washer	4	41	Pump	1
18	Bolt	4	42	Spring	2
19	Bolt	2	43	Cotter Pin	1
20	Lock Washer	4	44	Adaptor Rod	1
21	Caster	2	45	Bolt	1
22	Bolt	4	46	Lock Washer	1
23	Lock Washer	4	47	Flat Washer	2
24	Retaining Ring	2			

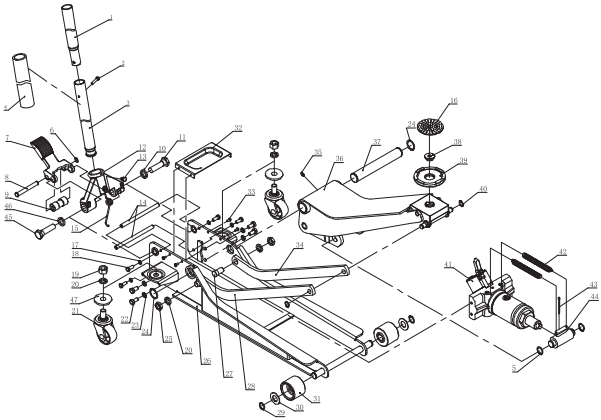

K12165

NO.	DESCRIPTION	QTY	NO.	DESCRIPTION	QTY
1	Adaptor Rod	1	25	Screw	4
2	Cotter Pin	1	26	Screw	2
3	Spring	2	27	Nut	2
4	Pump	1	28	Caster	2
5	Retaining Ring	2	29	Lock Washer	2
6	Flat Washer	2	30	Nut	2
7	Front Wheel	2	31	Handle Limiting Bar	2
8	Frame	1	32	Retaining Ring	2
9	Adjustable Plate	2	33	Bolt	1
10	Nut	2	34	Handle Limiting Bar (short)	1
11	Screw	2	35	Tools Tray	1
12	Retaining Ring	2	36	Bolt	2
13	Lifting Arm	1	37	Retaining Ring	2
14	Retaining Ring	2	38	Spindle	1
15	Saddle	1	39	Roller	1
16	Saddle Screw	1	40	Handle Socket	1
17	Rubber Pad	1	41	Limiting Screw	1
18	Nut	2	42	Handle Tube 2	1
19	Lock Washer	2	43	Handle Seelve	1
20	Lift Arm Shaft	1	44	Handle Tube 1	1
21	Zerk	1	45	Screw	4
22	Lock Washer	4			
23	Bolt	4			
24	Lock Washer	6			

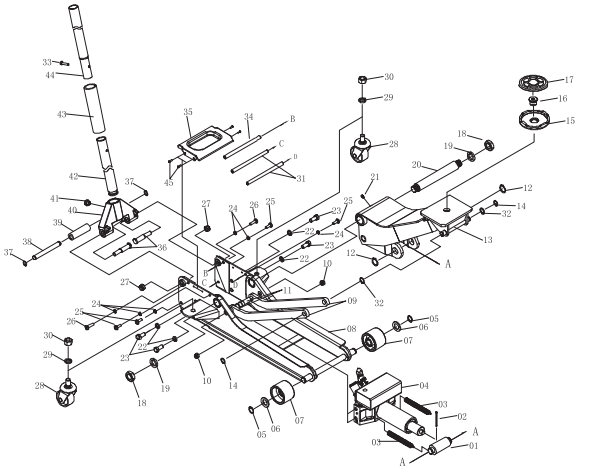

Exploded Diagrams

K12167

NO.	DESCRIPTION	QTY	NO.	DESCRIPTION	QTY
1	Handle Tube 1	1	23	Roller	1
2	Bolt	1	24	Spindle	1
3	Handle Sleeve	1	25	Tools Tray	1
4	Handle Tube 2	1	26	Lock Washer	4
5	Screw	1	27	Bolt	4
6	Handle Socket	1	28	Screw	4
7	Retaining Ring	1	29	Lock Washer	4
8	Nut	2	30	Bolt	4
9	Limiting Bar	2	31	Zerk	1
10	Lock Washer	1	32	Lifting Arm Assembly	1
11	Bolt	1	33	Lifting Arm Shaft	1
12	Nut	2	34	Retaining Ring	2
13	Lock Washer	4	35	Screw	1
14	Caster	2	36	Adaptor	1
15	Frame	1	37	Pump	1
16	Adjustable Plate	2	38	Spring	2
17	Screw	2	39	Cotter Pin	1
18	Retaining Ring	2	40	Adaptor Rod	1
19	Front Wheel	2	41	Rubber Pad	1
20	Flat Washer	2	42	Bolt	1
21	Retaining Ring	2	43	Flat Washer	2
22	Retaining Ring	2	44	Lock Washer	1

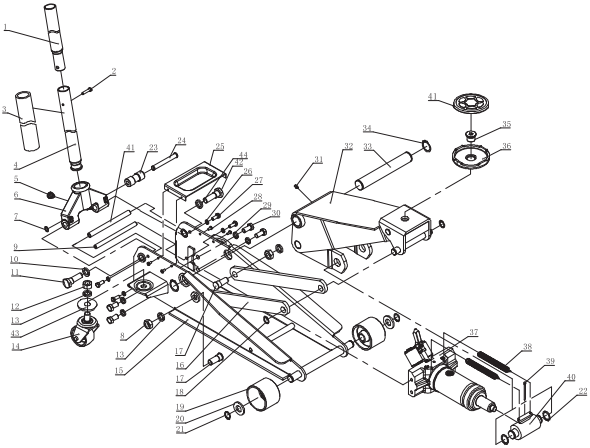

K12170

NO.	DESCRIPTION	QTY	NO.	DESCRIPTION	QTY
1	Handle Tube 1	1	22	Screw	2
2	Bolt	1	23	Adjustable Plate	2
3	Handle Tube 2	1	24	Retaining Ring	2
4	Handle Sleeve	1	25	Frame	1
5	Retaining Ring	1	26	Front Wheel	2
6	Handle Socket	1	27	Flat Washer	2
7	Screw	1	28	Retaining Ring	2
8	Roller	1	29	Pump	1
9	Spindle	1	30	Spring	2
10	Tools Tray	1	31	Cotter Pin	1
11	Limiting Bar	2	32	Retaining Ring	2
12	Rubber Pad	1	33	Adaptor Rod	1
13	Lock Washer	4	34	Nut	2
14	Lock Washer	2	35	Caster	2
15	Bolt	2	36	Retaining Ring	2
16	Bolt	4	37	Lifting Arm Shaft	1
17	Lock Washer	4	38	Zerk	1
18	Bolt	4	39	Lifting Arm Assembly	1
19	Screw	4	40	Adaptor	1
20	Lock Washer	4	41	Screw	1
21	Nut	2			

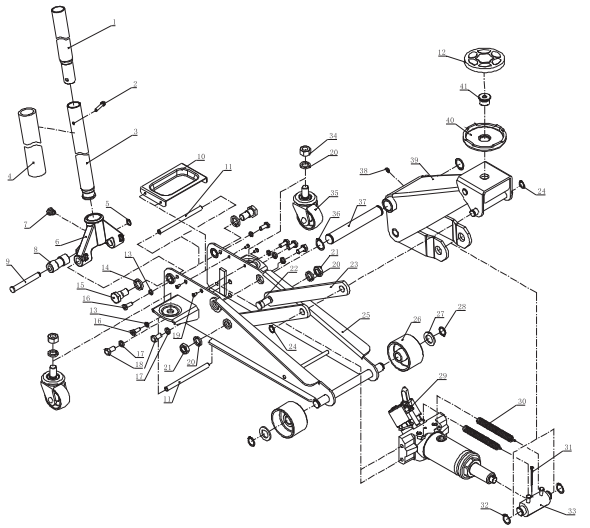

OFFICE CONTACT DETAILS

Phone: 1300 657 528 Email: enquiries@kincrome.com.au Website: www.kincrome.com.au

22 PAP

WARRANTY

2 YEAR WARRANTY

Our goods and services come with guarantees that cannot be excluded under the Australian Consumer Law. For major failures with the service, you are entitled: -to cancel your service contract with us; and -to a refund for the unused portion, or to compensation for its reduced value. You are also entitled to choose a refund or replacement for major failures with goods. If a failure with the goods or a service does not amount to a major failure, you are entitled to have the failure rectified in a reasonable time. If this is not done you are entitled to a refund for the goods and to cancel the contract for the service and obtain a refund of any unused portion. You are also entitled to be compensated for any other reasonably foreseeable loss or damage from a failure in the goods or service'. Kincrome Australia Pty Ltd of 3 Lakeview Drive, Caribbean Park, Scoresby, Victoria (Tel 1300 657 528) also provides the Kincrome Lifetime Guarantee and 12-Month Warranty (Kincrome Express Warranties) in respect of some of its products. If a product is covered by a Kincrome Express Warranty and it has materials or workmanship defects (other than defects caused by abnormal or non warranted use) which are covered under the terms of the relevant Kincrome Express Warranty, you can, at your cost, send the product to the above address for repair or replacement. Your rights under a Kincrome Express Warranty are in addition to any other rights you have under the Australian Consumer Law or other applicable laws. For further details and terms please check our product guide, visit www.kincrome.com.au or call us. Every effort is made to ensure advertised stock is available, but due to factors beyond the control of Kincrome Australia Pty. Ltd, not all products advertised in this catalogue may be available at all stores. Kincrome Australia Pty. Ltd. reserves the right to correct printing errors. All sizes shown are approximate only. Accessories shown do not come with the product unless otherwise specified. Due to printing process, colours in this catalogue may vary slightly to actual item. E. & O. E.© Copyright 2022. Reproduction in whole or in part is prohibited without written approval.