KINCROME
PROFESSIONAL QUALITY TOOLS

Parts Washer

180 Litre

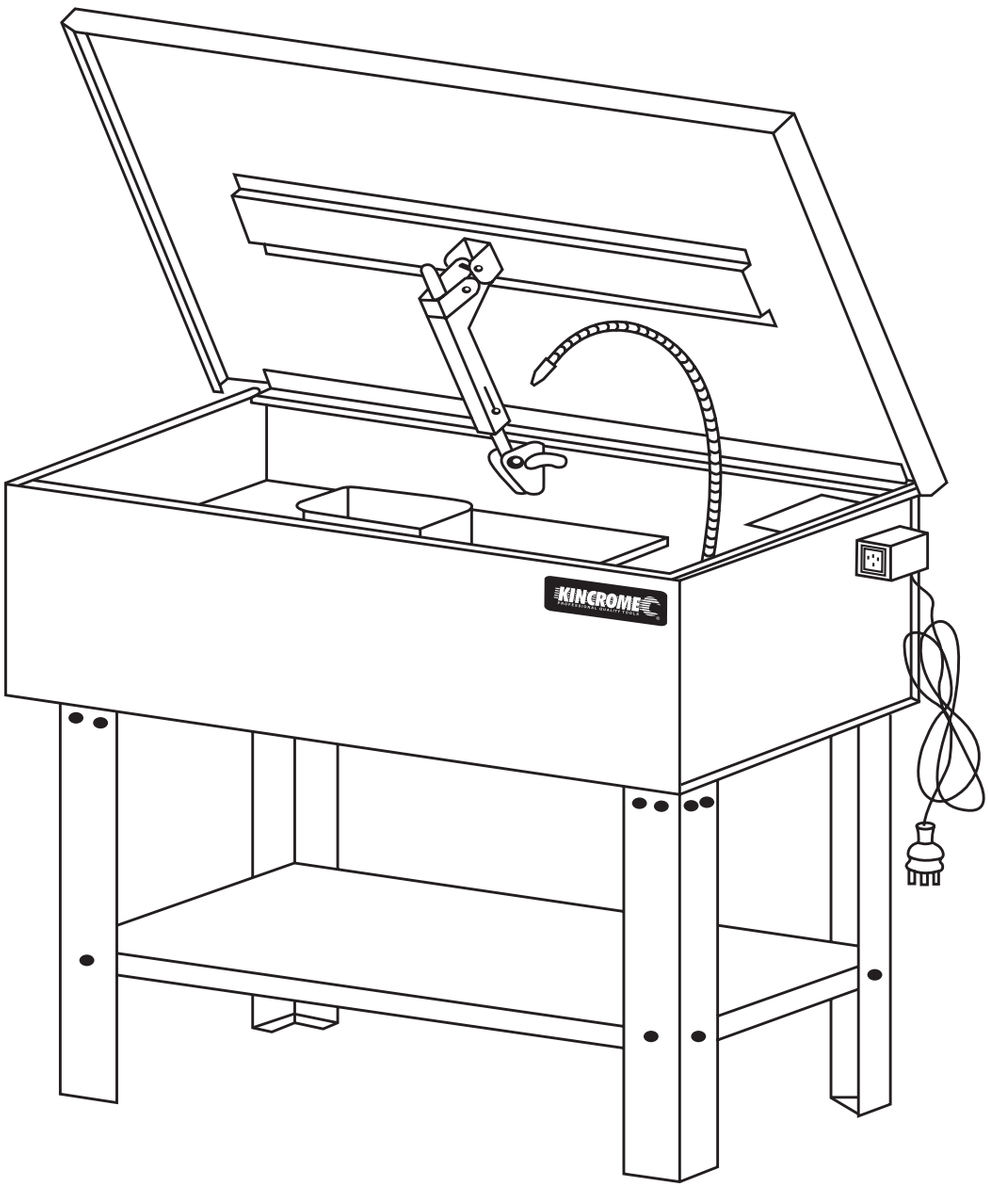

Part No – K13081

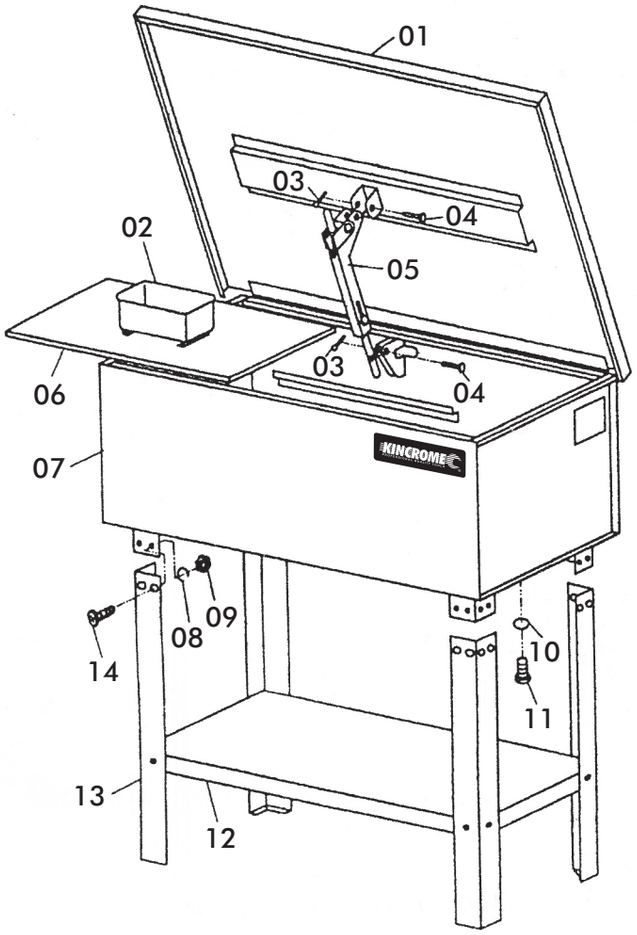

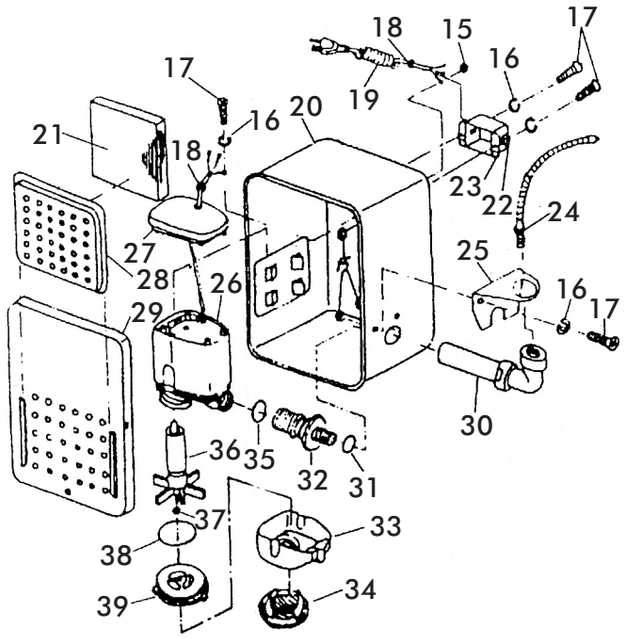

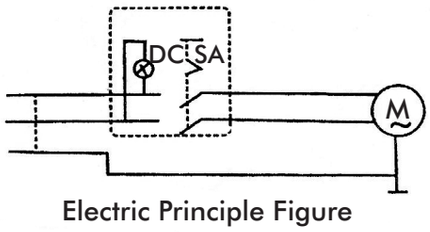

Electric Principle Figure

Parts No	Description	Quantity
01	Cover	1
02	Work Basket	1
03	Spring Pan	4
04	Pin	4
05	Safety Plate	4
06	Work Shelf	1
07	Body	1
08	Spring Washer	24
09	Nut	24
10	O-Ring	1
11	Plug	1
12	Shelf	1
13	Leg	4
14	Pan Screw	24
15	Nut	5
16	Spring Washer	5
17	Screw	5
18	Strain Relief	2
19	Cable and Plug	1
20	Pump Housing	1
21	Screen	1
22	Switch	1
23	Switch Box	1
24	Flexible Pipe	1
25	Elbow Seat	1
26	Pump Body	1
27	Pump Back Cover	1
28	Filter Cover	1
29	Pump Housing Over	1
30	Elbow	1
31	Plastic Washer	1
32	Spigot	1
33	Location of Knob	1
34	Filter	1
35	Seal Ring	1
36	Impeller	1
37	Shim Washer	1
38	Seal Ring	1
39	Impeller Holder	1

Assembly Instructions:

1. Remove parts washer from carton
2. Remove parts from inside parts washer
3. Carefully lay the parts washer on it's lid (lay cardboard on the floor first to prevent damage and scratches)
4. Mount four legs on brackets with M6x12 Phillips head screws and M6 nuts
   NOTE: DO NOT TIGHTEN AT THIS STAGE
5. Place lower shelf between legs with flat surface up and attached legs with M6x12 Phillips head screws and M6 nuts.
6. Using legs press tightly against lower shelf, and then tighten all screws.
7. Then tighten all screws in step 4
8. Stand the Parts Washer up, ensure that you hold the lid closed
9. Put work shelf and parts tub into Parts Washer
10. Mount pump assembly into slot on the side of the Parts Washer then insert filter screen
11. Plug Parts Washer into standard 240Volt (50Hz) grounded outlet and fill water and detergent mixture to desired level
12. Turn on switch. Fluid should now be flowing from the flexible hose.

Specifications:

Overall Dimensions:	1100mm x 500mm x 890mm
Tank Dimensions:	1100mm x 500mm x 270mm
Max Solvent Capacity:	180 Litres
Max Pump Output (through flexible hose):	10 – 12 Litres per minute
Electrical Requirements:	240 Volt / 50Hz / 0.5A
Gross Weight:	45 Kgs

Cleaning Solutions:

Approved cleaning solutions: Water/household detergents (PH6-8)

Warning:

The pump of your Parts Washer may be damaged if you use solvents other than those listed above such as Methylethy 1 Keton (MEK), Perchloroethylene or Trichloroethylene.

Trouble Shooting:

The only trouble you should ever experience with your Parts Washer is reduced volume flow or no flow of cleaning liquid from the flex hose nozzle. The probable cause is foreign matter in the flex hose.

Corrective Procedure:

1. Check if indicator light on switch box is lit.
2. Using an insulated handle screw driver to lightly touch tip of housing of motor. A light oscillation magnetic pull indicates power is reaching the motor.
3. Disconnect power plug, remove flex hose from pump flow-out line.
4. Remove front of pump housing by removing 3 screws. Clean any foreign matter lodged around impeller.
5. Reassemble in reverse order.

Service:

1. Regularly clean the filter to ensure good flow through pump and hose.
2. Replace cleaning fluid when it becomes too contaminated.

For Warranty and Service Issues please contact:

Customer Service Centre: Telephone: 1300 657 528 Facsimile: 1300 556 005
Warranty: Covered from 3 months from date of purchase against faulty workmanship and materials.