KINCROME PNEUMATIC

Powered by fiac

K13101

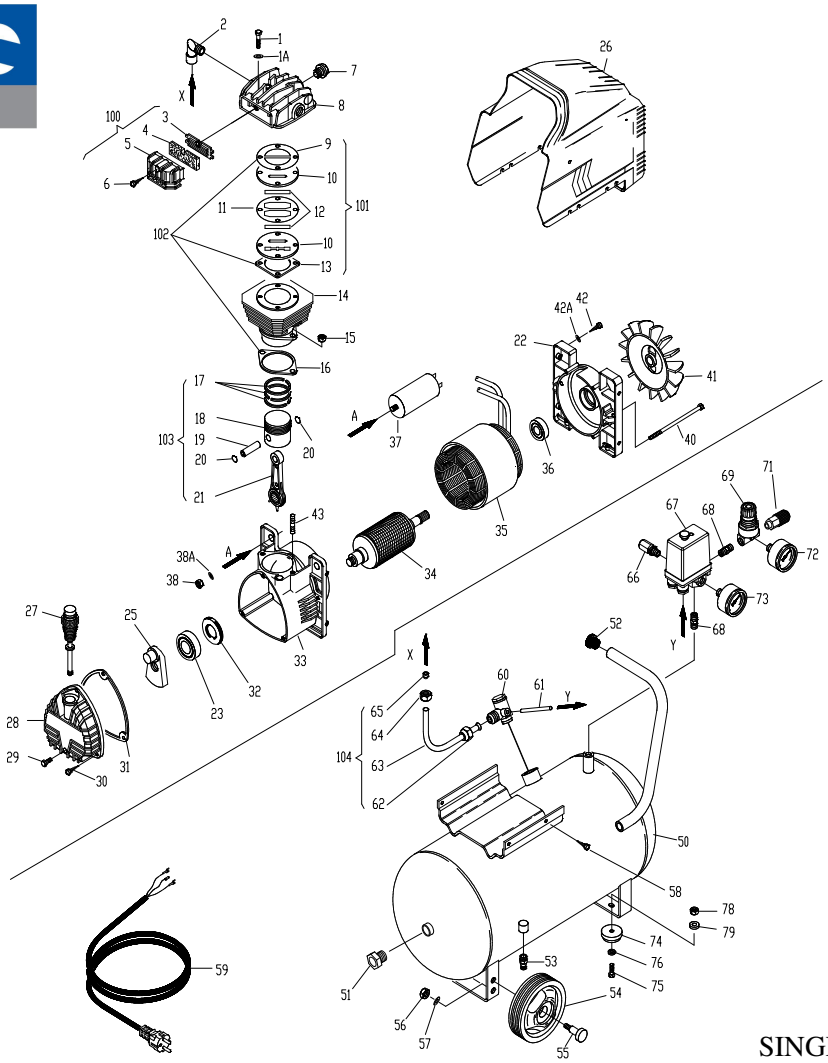

SINGLE PHASE V.230/50Hz
MONOFASE V. 230/50Hz

REF. *RIF.*	CODE *CODICE*	QT	DESCRIPTION *DESCRIZIONE*
1	7011220000	4	Screw M6x40 *Vite M6x40*
1A	9700010186	4	Washer D6 *Rondella D6*
2	9700010091	1	Joint *Raccordo*
3	7458340000	1	Plate *Piastra*
4	7210010000	1	Filtering element *Elemento filtrante*
5	7210430000	1	Intatake filter *Filtro aspirazione*
6	7012100000	1	Screw ST4.2x19 *Vite ST4.2x19*
7	9100250080	1	START valve 2.2bar *Valvola START 2.2bar*
8	9100030080	1	Head *Testa*
9	9100010310	1	Gasket 0.5mm *Guarnizione 0.5mm*
10	9100010240	2	Valve plate *Piastra portavalvole*
11	9100010080	1	Gasket 0.2mm *Guarnizione 0.2mm*
12	9100010370	2	Valve *Valvole lamellari*
13	9100020140	1	Gasket 0.5mm *Guarnizione 0.5mm*
14	9100030010	1	Cylinder Φ50 *Cilindro Φ50*
15	7020070000	2	Nut M8 *Dado M8*
16	9100010300	1	Gasket 2mm *Guarnizione 2mm*
17	9100010790	1	Piston ring Φ50 *Segmento Φ50*
18	7220020000	1	Piston Φ50 *Pistone Φ50*
19	9100010070	1	Piston pin Φ12x42 *Spinotto Φ12x42*
20	7041010000	2	Internal snapring D12 *Seeger D12*
21	5050150008	1	Con rod *Biella*
22	9100030070	1	Rear Cover *Calotta*
23	7060060000	1	Bearing 6205 *Cuscinetto 6205*
25	9100030030	1	Counter weight *Manovella*
26	9100010900	1	Plastic schroud *Carenatura*
27	7181150000	1	Oil dipstick *Asta livello olio*
28	7650020000	1	Carter cover *Coperchio carter*
29	7012160000	1	Screw M6x12 *Vite M6x12*
30	9700010187	3	Screw M5x14 *Vite M5x14*
31	7078460000	1	O-ring *O-ring*
32	9100010430	1	Oil seal d25xD52x10 *Paraolio d25xD52x10*
33	5070320008	1	Cranckcase *Carter*
34	9700002035	1	Rotor *Rotore*
35	9100030100	1	Stator 230V/50Hz *Motore 230V/50Hz*
36	7060010000	1	Bearing 6203-2RS/2RZ *Cuscinetto 6203-2RS/2RZ*
37	7310320000	1	Capacitor *Condensatore*
38	9700010188	1	Nut M8 *Dado M8*
38A	9700010184	1	Washer D8 *Rondella D8*
40	9100010060	2	Tension rod M6x138 *Tirante M6x138*

REF. *RIF.*	CODE *CODICE*	QT	DESCRIPTION *DESCRIZIONE*
41	9100010200	1	Fan *Ventola*
42	7013060000	1	Screw ST4x8 *Vite ST4x8*
42A	9700010183	1	Washer D4 *Rondella D4*
43	9100010050	2	Stud bolt M8x36 *Prigioniero M8x36*
50	9700010240	1	Tank 40L *Serbatoio 40L*
51	9100010750	2	Plug 1/2"G *Tappo 1/2"G*
52	9100010380	1	Rubber D20 *Gommino D20*
53	9700000324	1	Discharge tap 3/8"R *Rubinetto spurgo 3/8"R*
54	9700010077	2	Wheel D150 *Ruota D150*
55	9700010192	2	Screw D20× M10 *Vite D20× M10*
56	7020080000	2	Nut M10 *Dado M10*
57	7030040000	2	Washer D10 *Rondella D10*
58	7012290000	4	Screw ST5x20 *Vite ST5x20*
59	9700010146	1	Infeed cable *Cavo alimentazione*
60	9100010500	1	Non reture valve *Valvola di ritegno*
61	7230010000	1	Rilsan hose D6 *Tubo Rilsan D6*
62	9700000328	1	Nut 1/2"G *Dado 1/2"G*
63	9700010055	1	Infeed hose D14 *Tubo alimentazione D14*
64	9700000326	1	Nut 1/2"G *Dado 1/2"G*
65	7041170000	1	Ogive *Ogiva*
66	9700000303	1	Safety valve 9bar *Valvola di sicurezza 9bar*
67	9700000388	1	Pressure switch 10bar CE *Pressostato 10bar CE*
68	9700000330	2	Joint *Raccordo*
69	7100640000	1	Pressure reducer *Riduttore di pressione*
71	7130510000	1	Quick Coupler *Rubinetto rapido*
72	7110240000	1	Pressure gauge D40 *Manometro D40*
73	7110300000	1	Pressure gauge D50 *Manometro D50*
74	7360090000	2	Rubber D40 *Gommino D40*
75	7011220000	2	Screw M6x40 *Vite M6x40*
76	7030190000	2	Washer D6 *Rondella D6*
78	7021010000	2	Nut M6 *Dado M6*
79	9700010186	2	Washer D6 *Rondella D6*
100	4094470000	1	Filter kit *Filtrante kit*
101	9700002036	1	Valve plate kit *Piastra portavalvole kit*
102	9700002037	1	Seal kit *Sigillo kit*
103	9700010049	1	Piston kit *Pistone kit*
104	9700002030	1	Infeed hose kit *Tubo alimentazione kit*

VALID FROM 18/07/2011 - VALIDO DAL 18/07/2011 (REV-00)