KINCROME®

PROFESSIONAL QUALITY TOOLS

S.G IRON SWIVEL BASE VICE (4", 5", 6")

"UNBREAKABLE" **S.G** (SPHEROIDAL GRAPHITE) **IRON**

100% STRONGER THAN GREY IRON

LOCKABLE 360° SWIVEL BASE

INDUSTRIAL AND WORKSHOP QUALITY



K15054, K15055, K15056

ED1 Sept 16

SWIVEL BASE BENCH VICE

Table of Contents

Know Your Product 1
General Safety Instructions 2
Additional Safety Instructions 3
Operation 4
Maintenance & Warranty 5
Parts Breakdown 6

Know your product

1. Spindle Handle
2. Spindle
3. Replaceable Jaws
4. Spindle Nut
5. Swivel Base
6. Swivel Base Lock Down Nuts

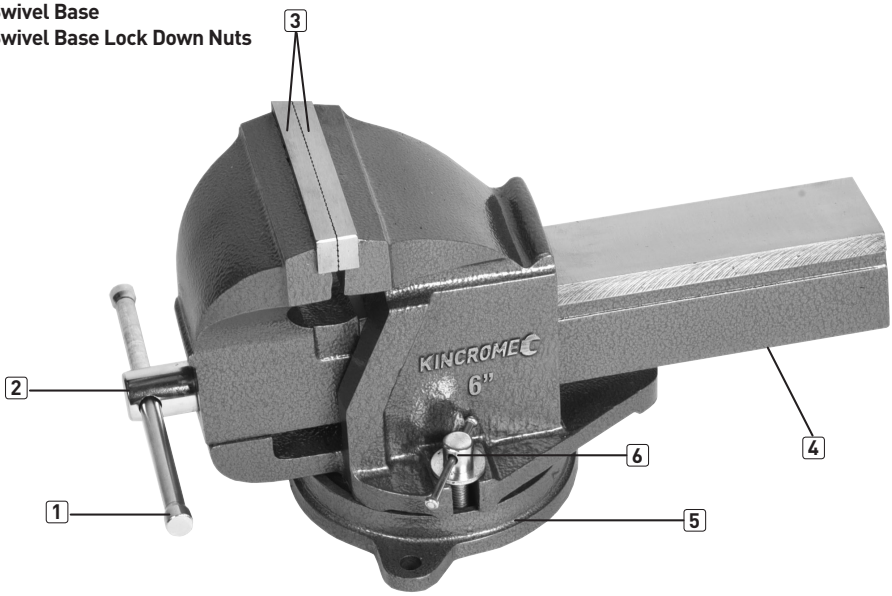

Specifications

Model No:	K15054	K15055	K15056
Jaw Opening	132mm	132mm	206mm
Jaw Width	102mm	128mm	153mm
Jaw Depth	74mm	74mm	95mm
Swivel	360°	360°	360°
Weight	11.54kg	16.8kg	22.1kg

General Safety Warnings

Save all warnings and instructions for future reference.

WARNING! Misuse of vice can cause serious injury. Please read, understand and follow all instructions outlined in this manual before setting up the vice.

a.) To ensure safety, vice must be installed and used properly.

b.) ALWAYS make sure the workbench top is secure.

c.) ALWAYS use eye, face, and ear protection.

d.) ALWAYS keep moving parts lubricated with multipurpose grease.

e.) ALWAYS keep workpiece centered in jaws. Uneven clamping pressure across jaws could damage vise.

f.) DO NOT overtighten jaws or lockdowns, damage to vise or workpiece could result. TIGHTEN BY HAND ONLY.

g.) DO NOT unscrew jaw beyond maximum opening.

h.) DO NOT place pressurized containers in vise.

i.) DO NOT use extreme heat or prolonged heat on vise.

j.) DO NOT strike any part of vise; permanent damage could result.

k.) DO NOT expose the vice to rain or wet conditions.

l.) This product is not a toy. Keep it out of reach of children.

m.) The warnings, precautions, and instructions discussed in this instruction manual cannot cover all possible conditions and situations that may occur. It must be understood by the operator that common sense and caution are factors which cannot be built into this product, but must be supplied by the operator.

Assembly

The only assembly required for the Kincrome S.G Swivel Base Vices is the assembly of the handle.

1. Unscrew one of the end caps located on the spindle handle.
2. Then slide the spindle handle through the handle assembly.
3. Reinstall the end cap removed earlier. Your vice is now fully assembled!

Mounting Tips

1. Use proper sized bolts, nuts, locks and flat washers in all base mounting holes. Never weld the base of the vice to any metal object.
2. Only hand tighten the swivel base lock down nuts at the side of the vice.
3. Never use a pipe extension to tighten the lock handles. This can cause the handles to bend and stress the lock down bolts.
4. Make sure the vice is mounted to a properly secured bench top, capable of supporting combined weight of vice, intended work pieces and applicable forces.

Tips Using The Vice

WARNING! Always wear eye and face protection when striking objects held by the vice or when using power tools with the vice.

1. Always use a vice proper size and capacity for the work piece.
2. Never use a hammer, pipe extension or cheater bar on spindle handle of the vice.
3. Never unscrew the moveable jaw beyond the maximum specified opening of the vice.
4. Never use a vice as a press for assembly or disassembly of objects.

Maintenance

1. Before each use, inspect the general condition of the vice. Check for misalignment or binding of moving parts, cracked or broken parts and any other condition which may effect safe operation.
2. Keep machined surfaces and all moving parts clean and free of dirt, chips, and foreign materials.
3. Use multipurpose grease to keep moving parts lubricated.
4. Routinely apply mineral oil to machined surfaces to prevent surface rust.

Spare Parts Diagram

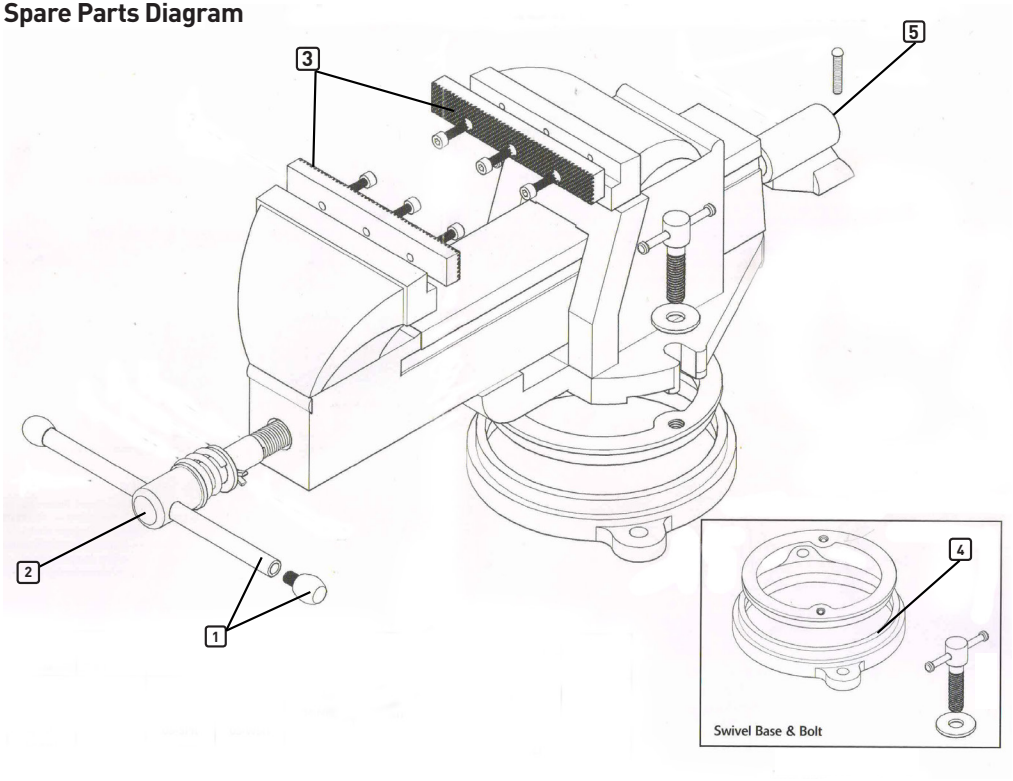

Spare Parts List

K15054		K15055		K15056	
K15054-1	Handle	K15055-1	Handle	K15056-1	Handle
K15054-2	Spindle	K15055-2	Spindle	K15056-2	Spindle
K15054-3	Jaws	K15055-3	Jaws	K15056-3	Jaws
K15054-4	Swivel base Assembly	K15055-4	Swivel base Assembly	K15056-4	Swivel base Assembly
K15054-5	Spindle Nut	K15055-5	Spindle Nut	K15056-5	Spindle Nut

Office Contact Details

Phone: 1300 657 528

Fax: 1300 556 005

Email: enquiries@kincrome.com.au

Website: www.kincrome.com.au

Caring For The Environment

When a tool is no longer usable it should not be disposed of with household waste, but in an environmentally friendly way. Please recycle where facilities exist. Check with your local council authority for recycling advice.
Recycling packaging reduces the need for landfill and raw materials. Reuse of recycled material decreases pollution in the environment. Please recycle packaging where facilities exist. Check with your local council authority for recycling advice.

Notes:

Warranty

Warranty given by Kincrome Tools & Equipment Pty Ltd of 3 Lakeview Drive, Caribbean Park, Scoresby, Victoria, Australia (Tel +61 3 9730 7100) If this product has materials or workmanship defects (other than defects caused by abnormal or non warranted use) you can, at your cost, send the product to place of purchase, an authorised Kincrome service agent or one of Kincromes addresses for repair or replacement. Your rights under this warranty are in addition to any other rights you have under the Australian, United Kingdom & Ireland Consumer Law or other applicable laws. Our goods come with guarantees that cannot be excluded under the Australian, United Kingdom & Ireland Consumer Law. You are entitled to a replacement or refund for a major failure and compensation for any other reasonably foreseeable loss or damage. You are also entitled to have the goods repaired or replaced if the goods fail to be of acceptable quality and the failure does not amount to a major failure. For further details please visit www.kincrome.com.au or call us. Due to minor changes in design or manufacture, the product you purchase may sometimes differ from the one shown on the packaging.

KINCROME
PROFESSIONAL QUALITY TOOLS

www.kincrome.com.au