K15065 parts list

| Part No. | Code | Description |
|---|---|---|
| 1 | K15065-1 | Up lift handle |
| 2 | K15065-2 | Lower lift handle |
| 3 | K15065-3 | External power socket |
| 4 | K15065-4 | Top cover |
| 5 | K15065-5 | Switch |
| 6 | K15065-6 | Power cable |
| 7 | K15065-7 | Platen power cord |
| 8 | K15065-8 | Cable sleeve |
| 9 | K15065-9 | PCB with Internal wiring |
| 10 | K15065-10 | Isobar secure cap |
| 11 | K15065-11 | NYLON cable ties |
| 12 | K15065-12 | Round frame |
| 13 | K15065-13 | Out of the wind baffle |
| 14 | K15065-14 | A spring wind baffle |
| 15 | K15065-15 | Motor cover |
| 16 | K15065-16 | Rubber ring for motor |
| 17 | K15065-17 | Motor-P |
| 18 | K15065-18 | Motor gasket |
| 19 | K15065-19 | Protect valve components |
| 20 | K15065-20 | Spong for eliminate noise |
| 21 | K15065-21 | Base for motor |
| 22 | K15065-22 | Rubber ring for moto base |
| 23 | K15065-23 | Float |
| 24 | K15065-24 | Float basket |
| 25 | K15065-25 | Float basket filters |
| 26 | K15065-26 | Barrel |
| 27 | K15065-27 | Suction Block |
| 28 | K15065-28 | Rubber ring for Suction Block |
| 29 | K15065-29 | Drain bayonet |
| 30 | K15065-30 | Barrel body handle |
| 31 | K15065-31 | Drain hose components |
| 32 | K15065-32 | Outlet components for drain hose |
| 33 | K15065-33 | Trolly handle |
| 34 | K15065-34 | Trolly base |
| 35 | K15065-35 | antistatic chain components |
| 36 | K15065-36 | Big wheel |
| 37 | K15065-37 | Axle |
| 38 | K15065-38 | Castor |
| 39 | K15065-39 | Dust bag |
| 40 | K15065-40 | Suction hose 1.5m with two connector |
| 41 | K15065-41 | Floor nozzle with metal plate |
| 42 | K15065-42 | Crevice nozzle |
| 43 | K15065-43 | Dust brush |
| 44 | K15065-44 | Metal telescopic tube |

## K15065 Explosive Drawing

### Head parts

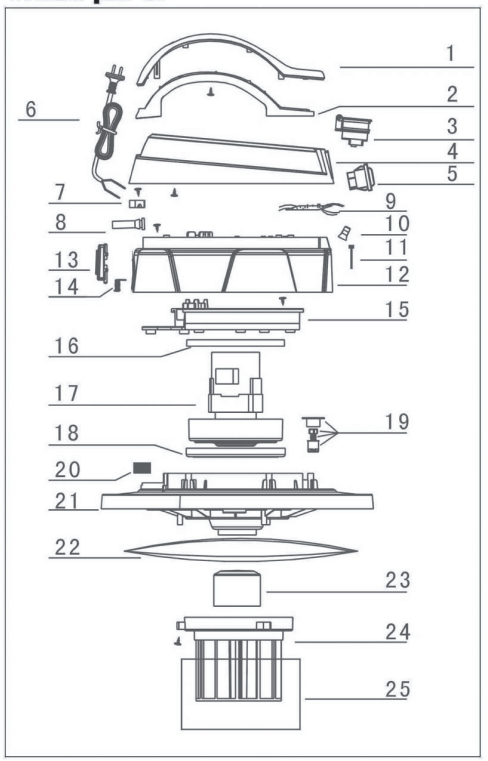


### Tank parts

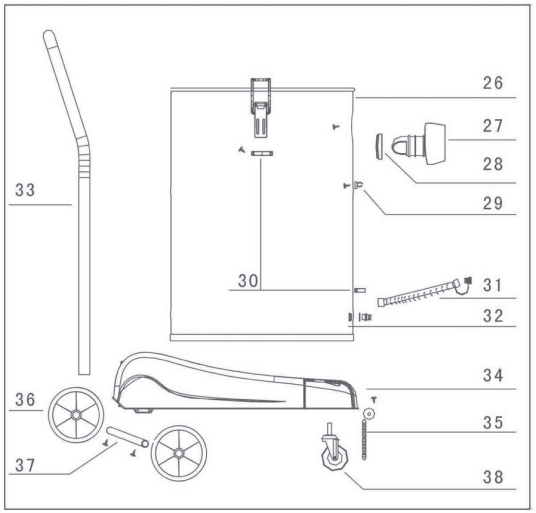


### Accessory parts

