K15080 parts list

Part No.	Code	Description	Part No.	Code	Description
1	K15080-1	upper lift handle	34	K15080-34	trolly handle fixed block
2	K15080-2	lower lift handle	35	K15080-35	shelf supporting for barrel
3	K15080-3	switch	36	K15080-36	trolly base
4	K15080-4	top cover	37	K15080-37	big wheel
5	K15080-5	circuit board parts	38	K15080-38	iron axle of big wheel
6	K15080-6	cable clip	39	K15080-39	wheel axle tap
7	K15080-7	cable sleeve	40	K15080-40	wheel axle fixed block
8	K15080-8	power cable	41	K15080-41	castor
9	K15080-9	cable -press cap	42	K15080-42	antistatic chain components
10	K15080-10	nylon tie	43	K15080-43	dry floor nozzle 40mm
11	K15080-11	round frame	44	K15080-44	wet floor nozzle 40mm
12	K15080-12	motor cover	45	K15080-45	crevice nozzle 40mm
13	K15080-13	rubber ring for motor	46	K15080-46	round dust brush 40mm
14	K15080-14	rubber rug for motor	47	K15080-47	dust bag
15	K15080-15	model-P motor	48	K15080-48	Suction hose 1.5m with two connectors 40mm
16	K15080-16	spong for eliminate noise	49	K15080-49	Metal curve tube 40mm
17	K15080-17	windproof three-bin board			
18	K15080-18	protection valve parts			
19	K15080-19	base for motor			
20	K15080-20	rubber ring for motor base			
21	K15080-21	rubber ring for EVA			
22	K15080-22	motor base cover			
23	K15080-23	float			
24	K15080-24	float basket			
25	K15080-25	float basket filter			
26	K15080-26	steel barrel with two locking block			
27	K15080-27	suction inlet base parts			
28	K15080-28	drainpipe locking block			
29	K15080-29	fixed block parts			
30	K15080-30	barrel body handle			
31	K15080-31	drain hose parts			
32	K15080-32	Outlet connectors parts for drain hose			
33	K15080-33	trolly handle			

K15080 Explosive Drawing

Head parts

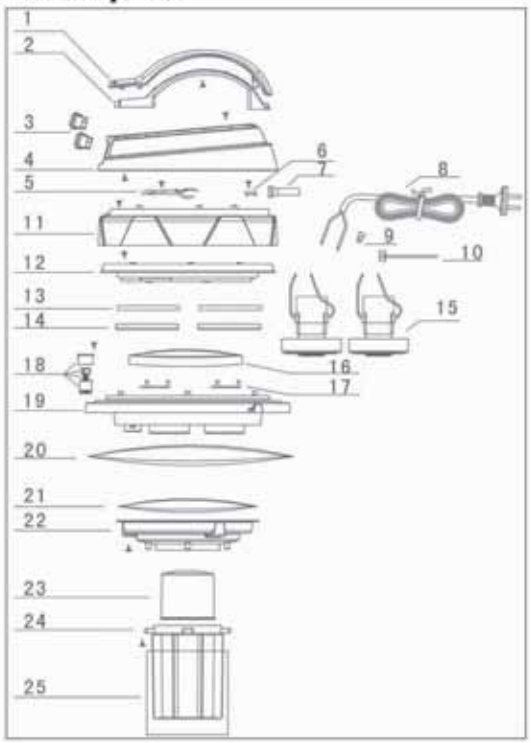

Tank parts

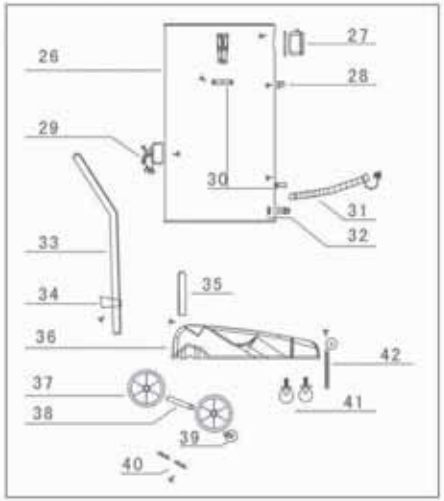

Accessory parts

