KINCROME PNEUMATIC

K13218

1" AIR IMPACT GUN ALLOY

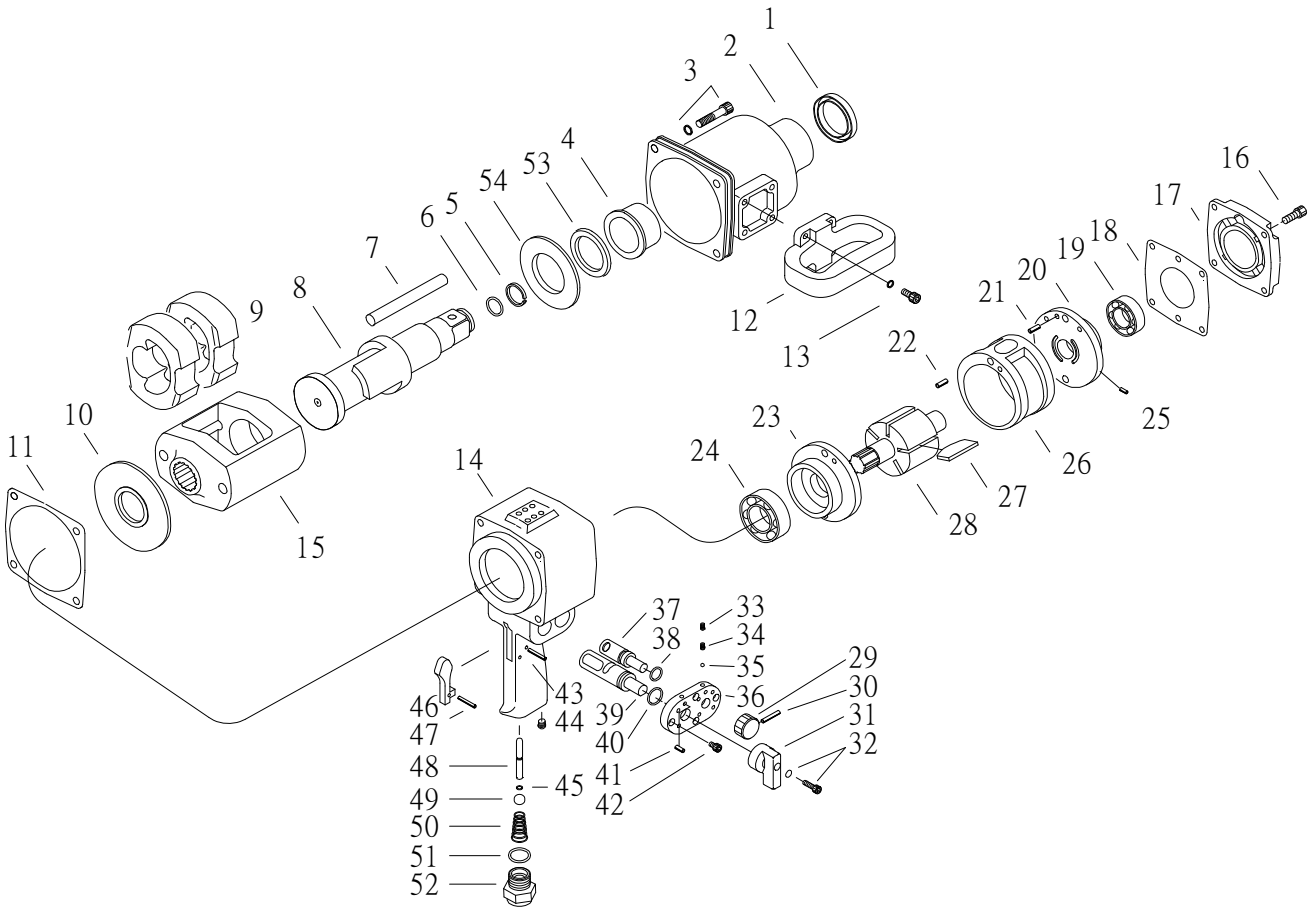

PART LIST

NO.	CODE NO.	PARTS NAME	Q'TY	NO.	CODE NO.	PARTS NAME	Q'TY
1	K13218-1	Oil Seal	1	28	K13218-28	Rotor	1
2	K13218-2	Hammer Case	1	29	K13218-29	Revgulator Knob	1
3	K13218-3	Screw	4	30	K13218-30	Spring Pin	1
4	K13218-4	Bushing	1	31	K13218-31	Reverse Lever	1
5	K13218-5	Anvil Collar	1	32	K13218-32	Screw	1
6	K13218-6	O-Ring	1	33	K13218-33	Set Screw	1
7	K13218-7	Hammer Pin	2	34	K13218-34	Spring	2
8	K13218-8	Anvil (2")	1	35	K13218-35	Ball	2
9	K13218-9	Hammer Dog	2	36	K13218-36	Valve Cap	1
10	K13218-10	Washer	1	37	K13218-37	Regulator Valve	1
11	K13218-11	Gasket	1	38	K13218-38	O-Ring	1
12	K13218-12	D-Handle	1	39	K13218-39	Reverse Valve	1
13	K13218-13	Screw+Washer	4	40	K13218-40	O-Ring	1
14	K13218-14	Motor Housing	1	41	K13218-41	Spring Pin	1
15	K13218-15	Hammer Cage	1	42	K13218-42	Screw	4
16	K13218-16	Screw	4	43	K13218-43	Spring Pin	1
17	K13218-17	Rear Cover	1	44	K13218-44	Set Screw	1
18	K13218-18	Rear Gasket	1	45	K13218-45	O-Ring	1
19	K13218-19	Ball Bearing	1	46	K13218-46	Trigger	1
20	K13218-20	Rear Plate	1	47	K13218-47	Spring Pin	1
21	K13218-21	Spring Pin	1	48	K13218-48	Valve Stem	1
22	K13218-22	Spring Pin	1	49	K13218-49	Ball	1
23	K13218-23	Front Plate	1	50	K13218-50	Spring	1
24	K13218-24	Ball Bearing	1	51	K13218-51	O-Ring	1
25	K13218-25	Spring Pin	1	52	K13218-52	Hose Adaptor	1
26	K13218-26	Cylinder	1	53	K13218-53	Washer	1
27	K13218-27	Rotor Blade	6	54	K13218-54	Washer	1