150mm/200mm Bench Grinder

PART NO.: K15150/K15200

INSTRUCTION MANUAL

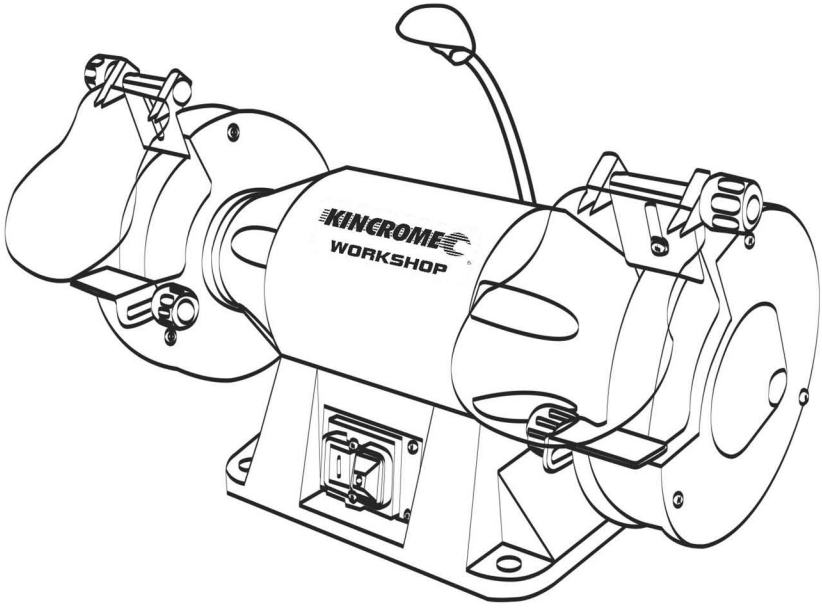

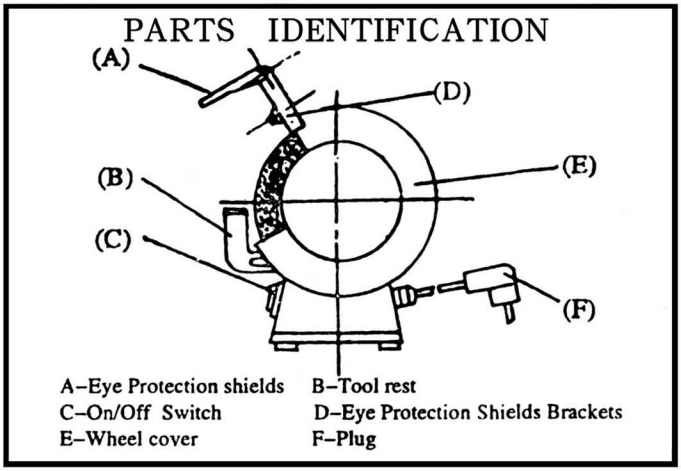

SAFETY INSTRUCTIONS

WARNING! When using electric tools, basic safety precautions should always be followed to reduce the risk of fire, electric shock and personal injury, including the following . SAFETY FIRST - read all instructions thoroughly and learn the applications, operating limitations and potential hazards of this tool before attempting to operate it.

1. KEEP WORK AREA CLEAN: Cluttered areas and benches invite injuries.
2. CONSIDER WORK AREA ENVIRONMENT: Don't expose power tools to rain. Don't use power tools in damp or wet locations. Keep work area well lit. Don't use tool in presence of flammable liquids or gases.
3. KEEP CHILDREN AWAY: Do not let visitors contact tool or extension cord. All visitors should be kept away from work area.
4. STORE IDLE TOOLS: When not in use tools should be stored in dry, high, or locked-up place out of reach of children.
5. DON'T FORCE TOOL: It will do the job better and safer at the rate for which it was intended.
6. USE RIGHT TOOL: Don't force small tool or attachment to do the job of a heavy-duty tool. Don't use tool for purpose not intended. For example, don't use circular saw for cutting tree limbs or logs.
7. DRESS PROPERLY: Don't wear loose clothing or jewelry. They can be caught in moving parts. Rubber gloves and nonskid footwear are recommended, Wear protective hair covering to contain long hair.
8. USE SAFETY GLASSES: Also, use dust mask if cutting operation is dusty.
9. DON'T OVERREACH: Keep proper footing and balance at all times.

10.MAINTAIN TOOLS WITH CARE: Keep tools sharp and clean for better and safer performance. Follow instruction for lubricating and changing accessories. Inspect tool cords periodically and if damaged, have them repaired by authorized service facility.
11.REMOVE ADJUSTING KEYS AND WRENCHES: Form habit of checking that keys and adjusting wrenches are removed from tool before turning tool on.
12.STAY ALERT WATCH WHAT YOU ARE DOING: Use common sense. Do not operate tool when you are tired.
13.CHECK DAMAGED PARTS: Before using the tool, check carefully to determine that it will operate properly and perform its intended function. Check for alignment of moving parts, binding of moving parts, breakage of parts, mounting and any other conditions that may affect its operation. A guard or other part that is damaged should be properly repaired or replaced by an authorized service technician also have defective switches replaced by authorized service technician. Don't use tool if switch does not turn it on and off.
14.ACCESSORIES: The use of accessories or attachments other than recommended might present a hazard.
15.REPLACEMENT PARTS: When servicing use only identical replacement parts.
16.SAVE THESE INSTRUCTIONS FOR FUTURE REFERENCE

MAIN STRUCTURE

1.MOTOR is of single phase and insulation of class **B** with motor frame being made of aluminum or iron casting.
2.WHEEL COVER is made of steel plate. It is used to prevent splashing of sparks and to connect eye protectors.
3.GRINDING WHEELS
4.SWITCH
5.PLUG & WIRE is of three prongs with one being ground wire.
6.CAPACITOR

PRECAUTIONS ON USING BENCH GRINDERS

1.Disconnect power supply plug before replacing wheels or covers.
2.Replace cracked or damaged wheels immediately.
3.Always use guards and eye shields.
4.Ensure tool rests and eye shields are properly adjusted.
5.Do not over tighten wheel nut.
6.Adjust distance between wheel and tool rest to maintain 1/16"(1.6mm) or less separation as the diameter of the wheel decreases with use.
7.Use grinding wheel suitable for the speed of the grinder.
8.Ensure grinding wheels rotate freely before switching on power.

9.Stand beside the bench grinder when switching on the power. Do not stand if front of the grinder.
10.Allow a new grinding wheel to rotate for one minute prior to use to ensure it is in good condition.
11.Don't operate the grinder with the wheel guard off.
12.Don't use the grinding wheels for cutting purposes.
13.Do not overload the grinder.
14.Use a wheel dresser to remove burrs from the grinding wheel.
15.Maintain a distance between the spark breaker and the grinding wheel of less than 1/16" (1.6mm).

ASSEMBLY

Assemble the eye shields, spark breakers and tool rests using the screws provided. Be sure to position both the tool rests and spark breakers no more than 1.6 mm (1/16") from the edge of the grinding wheel.
It is advisable to secure the bench grinder to the work bench or stand.

OPERATION

1.After switching the grinder on, allow it to reach full speed before commencing grinding operation.
2.The eye shields are able to be adjusted and should be positioned to allow the operator a clear view of the work through the shields.
3.The appropriate adjustments of the tool rests will provide the correct working angle for efficient grinding. As the diameter of the grinding wheel is subject to wear, it will be necessary to re-adjust the tool rests positions to maintain the correct gap of less than 1.6mm (1/16") with the edge of the grinding wheel.

REMOVING OR CHANGING THE GRINDING WHEELS

To renew or change the grinding wheels, follow these series of steps:
(a) Disconnect the power supply cord.
(b) Remove the outside covers, left and right.
(c) Holding the grinding wheel firmly, remove the nut and flange from the shaft with a spanner Note that the left wheel nut has a left hand thread and the right wheel nut has a right hand thread.
(d) Remove the old wheel and replace it with the new wheel.
(e) Reassemble the flange, nut, and outside covers.
(f) Allow the grinder to run for one minute to ensure the grinding wheel is not out of balance before commencing any grinding work.

TECHNICAL DATA

PART NO.	K15150	K15200
Voltage	230V-50Hz	230V-50Hz
Diameter	150×25×32mm	200×32×32mm
Rated power	520W	900W

K15150 Explosive Drawing

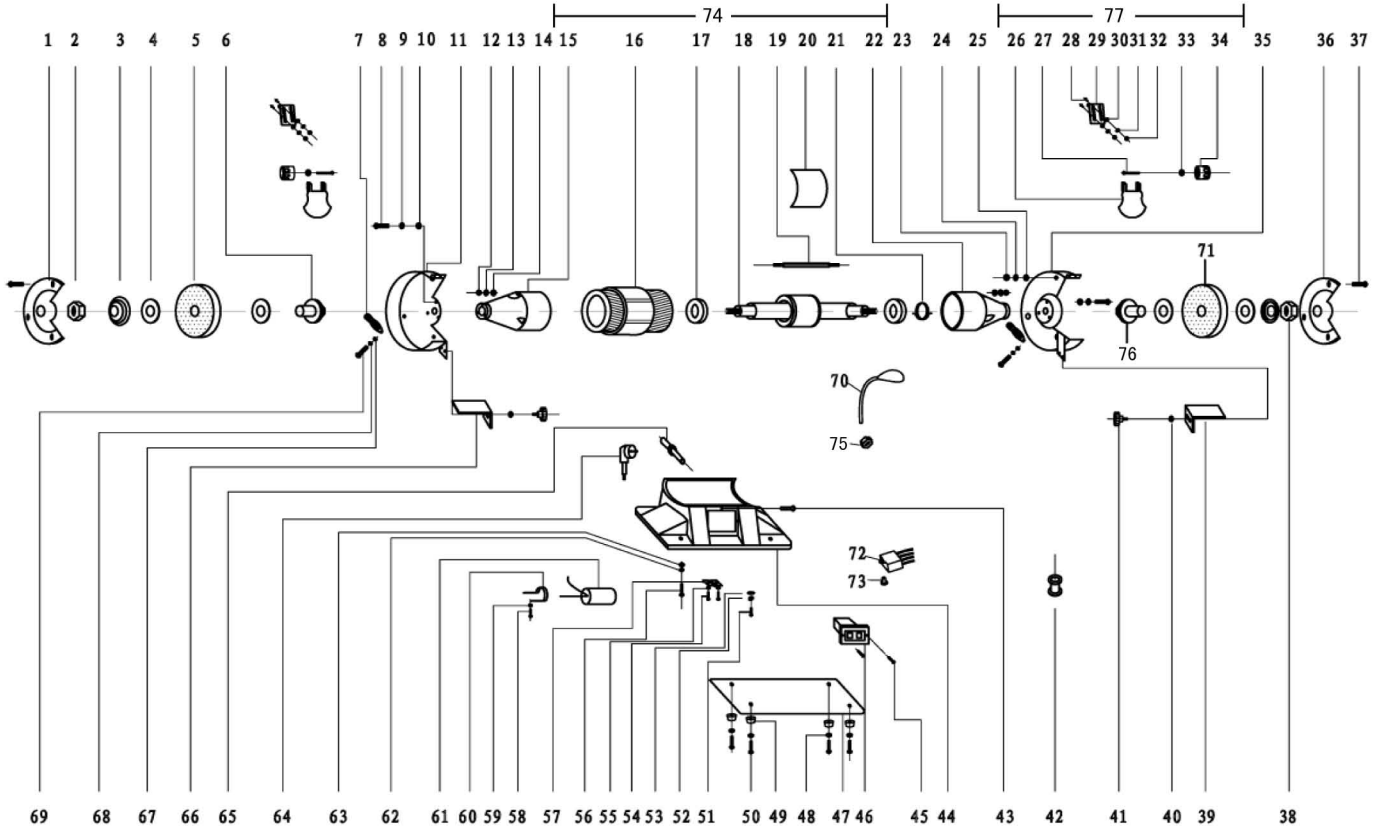

K15200 Explosive Drawing

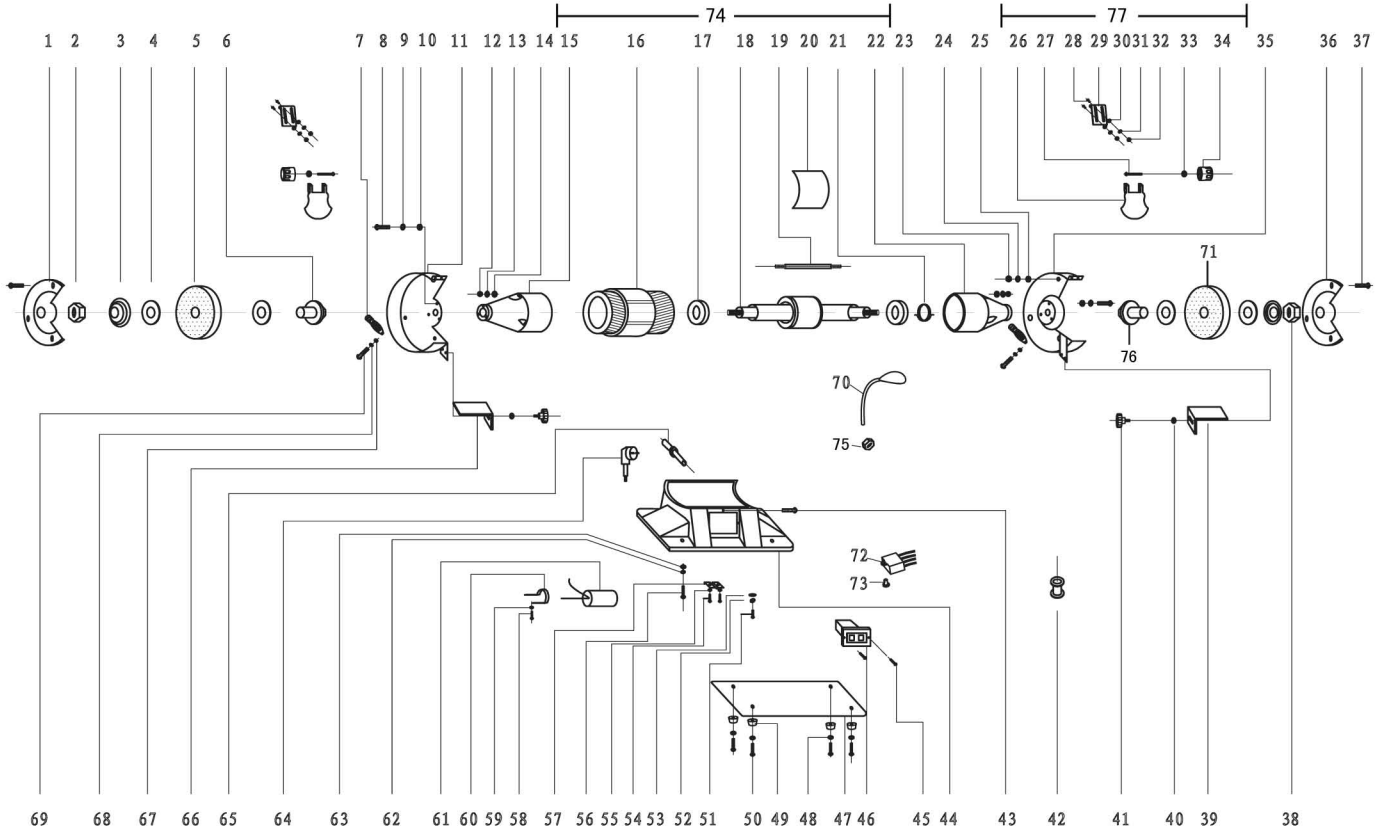

K15150 Parts List

Part No.	Code	DESCRIPTION	Part No.	Code	DESCRIPTION
1	K15150-1	Left Outer Cover	40	K15150-40	Washer
2	K15150-2	Wheel Lock Nut	41	K15150-41	Knob Nut
3	K15150-3	Outer Wheel flange	42	K15150-42	Cable protector
4	K15150-4	Nameplate of wheel	43	K15150-43	Bolt
5	K15150-5	6″Wheel (FINE)	44	K15150-44	Base
6	K15150-6	Inner Wheel flange	45	K15150-45	Bolt
7	K15150-7	Ash Tube	46	K15150-46	Switch
8	K15150-8	Bolt	47	K15150-47	Base plate
9	K15150-9	Washer	48	K15150-48	Washer
10	K15150-10	Flat washer	49	K15150-49	Rubber feet
11	K15150-11	Left Inner Cover	50	K15150-50	Bolt
12	K15150-12	Screw	51	K15150-51	Bolt
13	K15150-13	Washer	52	K15150-52	Washer
14	K15150-14	Flat washer	53	K15150-53	Tooth washer
15	K15150-15	End cover	54	K15150-54	Bolt
16	K15150-16	Stator	55	K15150-55	Flat washer
17	K15150-17	Bearing	56	K15150-56	Bolt
18	K15150-18	Rotor	57	K15150-7	Cord bushing plate
19	K15150-19	Bolt	58	K15150-58	Bolt
20	K15150-20	Label	59	K15150-59	Flat washer
21	K15150-21	Waved spring	60	K15150-60	Capactitor clip
22	K15150-22	End cover	61	K15150-61	Capacitor
23	K15150-23	Screw	62	K15150-62	Washer
24	K15150-24	Washer	63	K15150-63	Flat washer
25	K15150-25	Flat washer	64	K15150-64	Plug & Cord
26	K15150-26	Eyeshield	65	K15150-65	Cable Adaptor
27	K15150-27	Square Neck Screw	66	K15150-66	Left Tool Rest
28	K15150-28	Screw	67	K15150-67	Flat washer
29	K15150-29	Eyeshield Bracket	68	K15150-68	Washer
30	K15150-30	Washer	69	K15150-69	Bolt
31	K15150-31	Flat washer	70	K15150-70	Lamp
32	K15150-32	Nut	71	K15150-71	6″Wheel (Coarse)
33	K15150-33	Flat washer	72	K15150-72	Transformer
34	K15150-34	Knob Nut	73	K15150-73	Screw
35	K15150-35	Right Inner Cover	74	K15150-74	Motor Assembly
36	K15150-36	Right Outer Cover	75	K15150-75	Nut
37	K15150-37	Bolt	76	K15150-76	Flange
38	K15150-38	Wheel Lock Nut	77	K15150-77	Guard Assembly
39	K15150-39	Right Tool Rest			

K15200 Parts List

PART NO.	CODE	DESCRIPTION	PART NO.	CODE	DESCRIPTION
1	K15200-1	Left Outer Cover	40	K15200-40	Washer
2	K15200-2	Wheel Lock Nut	41	K15200-41	Knob Nut
3	K15200-3	Outer Wheel flange	42	K15200-42	Cable protector
4	K15200-4	Nameplate of wheel	43	K15200-43	Bolt
5	K15200-5	8″Wheel (FINE)	44	K15200-44	Base
6	K15200-6	Inner Wheel flange	45	K15200-45	Bolt
7	K15200-7	Ash Tube	46	K15200-46	Switch
8	K15200-8	Bolt	47	K15200-47	Base plate
9	K15200-9	Washer	48	K15200-48	Washer
10	K15200-10	Flat washer	49	K15200-49	Rubber feet
11	K15200-11	Left Inner Cover	50	K15200-50	Bolt
12	K15200-12	Screw	51	K15200-51	Bolt
13	K15200-13	Washer	52	K15200-52	Washer
14	K15200-14	Flat washer	53	K15200-53	Tooth washer
15	K15200-15	End cover	54	K15200-54	Bolt
16	K15200-16	Stator	55	K15200-55	Flat washer
17	K15200-17	Bearing	56	K15200-56	Bolt
18	K15200-18	Rotor	57	K15200-57	Cord bushing plate
19	K15200-19	Bolt	58	K15200-58	Bolt
20	K15200-20	Label	59	K15200-59	Flat washer
21	K15200-21	Waved spring	60	K15200-60	Capactitor clip
22	K15200-22	End cover	61	K15200-61	Capacitor
23	K15200-23	Screw	62	K15200-62	Washer
24	K15200-24	Washer	63	K15200-63	Flat washer
25	K15200-25	Flat washer	64	K15200-64	Plug & Cord
26	K15200-26	Eyeshield	65	K15200-65	Cable Adaptor
27	K15200-27	Square Neck Screw	66	K15200-66	Left Tool Rest
28	K15200-28	Screw	67	K15200-67	Flat washer
29	K15200-29	Eyeshield Bracket	68	K15200-68	Washer
30	K15200-30	Washer	69	K15200-69	Bolt
31	K15200-31	Flat washer	70	K15200-70	Lamp
32	K15200-32	Nut	71	K15200-71	8″Wheel(Coarse)
33	K15200-33	Flat washer	72	K15200-72	Transformer
34	K15200-34	Knob Nut	73	K15200-73	Screw
35	K15200-35	Right Inner Cover	74	K15200-74	Motor Assembly
36	K15200-36	Right Outer Cover	75	K15200-75	Nut
37	K15200-37	Bolt	76	K15200-76	Flange
38	K15200-38	Wheel Lock Nut	77	K15200-77	Guard Assembly
39	K15200-39	Right Tool Rest			