KINCROME

750MM 4 BLADE PEDESTAL FAN



KP1005

ED3 (May 22)

Table of Contents

Know Your Product 2
Fan Safety Instructions 3
Fan Assembly 4
Fan Operation 5
Warranty 6

Know your product

1. Front Safety Grill
2. Rear Safety Grill
3. Fan Blade
4. 3 Speed Switch
5. Oscillation Cam Block
6. Oscillation Bar & Grub Screw
7. Locking Knob
8. Telescopic Stand
9. Base
10. Fan Grill Securing Hole

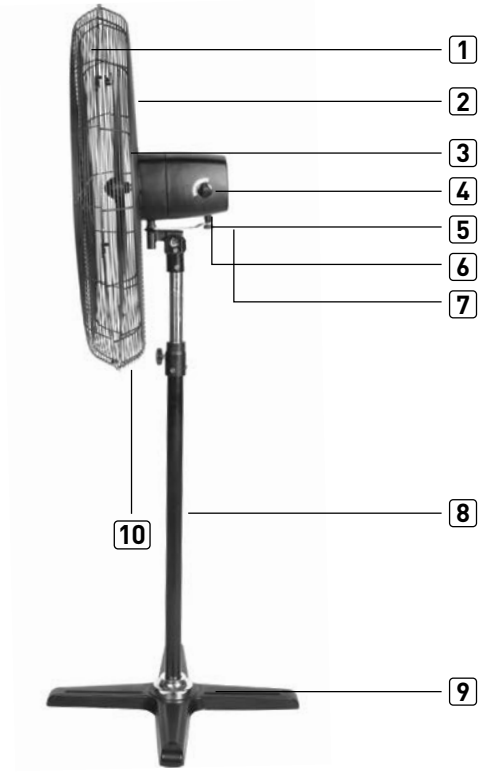

SPECIFICATION

Model No:	KP1005
Voltage:	220-240 V ~ 50 Hz
Wattage:	230W
Rated Speed:	1300 - 1400/rpm
Air Volume:	280 - 300 m^3/min
Blade Type:	Aluminium
Approvals:	Climate Class T
Protection Class:	Double Insulated
Net Weight:	17.7kg

General Power Tools Safety Warnings

Save all warnings and instructions for future reference.
WARNING! Read all safety warnings and all instructions. Failure to follow the warnings and instructions may result in electric shock, fire and/or serious injury.

1) Electrical Safety

a) Power lead plugs must match the outlet. Never modify the plug in any way. Do not use any adapter plugs with earthed (grounded) power tools. Unmodified plugs and matching outlets will reduce risk of electric shock.
b) Avoid body contact with earthed or grounded surfaces, such as pipes, radiators, ranges and refrigerators. There is an increased risk of electric shock if your body is earthed or grounded.
c) Do not expose power tools to rain or wet conditions. Water entering a power tool will increase the risk of electric shock.
d) Do not abuse the cord. Never use the cord for carrying, pulling or unplugging the power tool. Keep cord away from heat, oil, sharp edges or moving parts. Damaged or entangled cords increase the risk of electric shock.
e) If operating a power tool in a damp location is unavoidable, use a residual current device (RCD) protected supply. Use of an RCD reduces the risk of electric shock.
f) Do not operate powered products in explosive atmospheres, such as in the presence of flammable liquids, gases or dust. Powered products create sparks which may ignite the dust or fumes.
g) Keep children and bystanders away while operating any powered products. Distractions can cause you to lose control.

2) Service

a) Have your power tool serviced by a qualified repair person using only identical replacement parts. This will ensure that the safety of the power tool is maintained.

3) Fan Additional Safety Instructions

a) This Fan is not intended for use by persons (including children) with physical, sensory or mental capabilities, or lack of experience and knowledge, unless they have been given supervision or instruction concerning use of the Fan by a person responsible for their safety.
b) Children should be supervised to ensure that they do not play with the Fan.
c) Carefully read all instructions before operating the fan for the first time and save for future reference.
d) Do not use this Fan for anything other than its intended use. Do not use outdoors. Misuse may cause injury.
e) The installation of a residual current device (safety switch) is recommended to provide additional safety protection when using electrical Fans. It is advisable that a safety switch with a rated residual operating current not exceeding 30mA.
f) To protect against electric shock, do no immerse the fan, cord or plug in water or any other liquid.
g) Disconnect the power plug before dismantling, assembling or before cleaning and when the fan is not in use.
h) Avoid touching the moving parts of the fan.
i) Ensure the fan is on a dry and even surface.
j) Never insert fingers, pencils or any other objects through the guards.
k) The fan must have all guards assembled/fastened correctly, according to these instructions before use.
l) Do not operate in the presence of explosives and/or flammable fumes or liquids.
m) Never leave the fan running unattended.
n) Never carry the fan by the cord or pull the cord to disconnect from an outlet; instead, grasp the plug and pull to disconnect.
o) It is recommended to regularly inspect the Fan. To avoid a hazard do not use the fan if power cord, power plug or Fan becomes damaged in any way. Return the fan to the nearest authorised Service Centre for examination and/or repair.

4) Risk of Electric Shock

a) Never touch the mains plug and the socket with wet hands.
b) Do not pull the plug from the socket by pulling on the power cable.
c) Check the power cord and mains plug for damage before every use.
d) To avoid accidents due to electrical faults we recommend the use of sockets with a line-side current-limiting circuit breaker (max. 30 mA nominal tripping current).
e) Check the appliance and the power cord regularly for any possible damage. Don't use damaged appliances.
f) If the supply cord is damaged, it must be replaced by the manufacturer, its service agent or similarly qualified persons in order to avoid a hazard.

750mm 4 Blade Pedestal Fan Assembly Instruction

KP1005 - 750mm 4 Blade Pedestal Fan

Unpack all the components from the box.

1) Assembling The Base To The Telescopic Stand

1. While holding the Base (9) on its side, insert the Telescopic Stand (8) into the Base (9) (fig 1a).
2. Locate the supplied 19mm bolt and washer and fit it up through the centre of the base and into the bottom of the Telescopic Stand (8). Firmly tighten the bolt with a 19mm spanner (not supplied) (fig 1b & 1c).


(fig 1a)


(fig 1b)


(fig 1c)

2) Installing Chrome Plastic Bezel Onto Base

1. Place the stand upright and remove the 3 x 10mm bolts from the collar of the Telescopic Stand (8) and pull out the inner shaft (fig 2a & 2b).
2. Place the Chrome Plastic Bezel over the outer shaft of the Telescopic Stand (8) and slide it down to the Base (9) (fig 2c).
3. Reinstall the inner shaft and collar back onto the outer shaft of the Telescopic Stand (8) (fig 2d).
4. Tighten the 3 x 10mm bolts on the collar of the Telescopic Stand (8) (fig 2e).

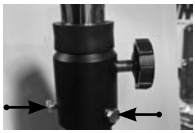
(fig 2a)


(fig 2b)


(fig 2c)


(fig 2d)

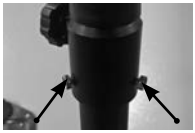
(fig 2e)

3) Assembling The Motor To The Telescopic Stand

1. Remove the nut & bolt from the lower knuckle joint on the Telescopic Stand (8) (fig 3a).
2. Insert the motor into the lower knuckle joint (fig 3b).
3. Identify the bolt with a locating key and lower knuckle key way. Insert motor knuckle into the lower knuckle. Insert the bolt all the way through from the key way side. Fit the spring washer and nut, and tighten (fig 3c).

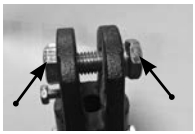
(fig 3a)


(fig 3b)


(fig 3c)

4) Assembling The Fan Blade To The Fan Motor

1. Rotate the fan motor shaft until the rebated flat area on the shaft is in the 12 o'clock position.
2. Locate the lock screw in the fan blade coupling; while aligning the screw and motor shaft rebated flat area push the Fan Blade (3) all the way onto the shaft and firmly tighten the grub screw by rotating in a clockwise direction (Fig. 4a), (Fig. 4b).


(fig 4a)


(fig 4b)

5) Assembling The Front Safety Grill To The Fan Motor

1. Align the top locking clip on the Front Safety Grill (1) to the top centre of the Rear Safety Grill (2) that has already been secured to the fan motor (fig 5a).
2. Lock the side and bottom clips in place (fig 5b).
   Note: The Kincrome logo should be level or horizontal.
3. Secure the front & rear safety grills together using the fan grill securing hole in the bottom of the fan grill by inserting the fixing screw and nut provided (fig 5c).


(fig 5a)


(fig 5b)

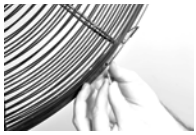
(fig 5c)

6) Operation

Caution: Prior to plugging in the unit ensure the switch is in the off (0) position.

1. Located at the rear right of the motor unit is the 3 Speed Switch (4).
2. Plug the unit into a wall socket and switch the socket on.
3. Rotate the 3 Speed Switch (4) to the desired speed 0 – OFF, 1 – LOW, 2 – MEDIUM, 3 – HIGH.
4. To turn the unit off rotate the Switch (4) to the OFF position 0.


(fig 6a)


(fig 6b)

7) Tilt Adjustment

Caution: Ensure both the Front and Rear Safety Grill (1 & 2) are assembled prior to making any adjustments.
Caution: Ensure the unit is turned off and unplugged, and the blades are stationary prior to making any adjustments.

1. To adjust the fan tilt; Hold the motor then loosen the bolt under the motor and tilt the fan to the desired position; re-tighten the bolt under the motor FIRMLY.
2. Plug the unit back in and turn on to the desired speed.

8) Adjusting the Oscillation

Caution: Prior to making any adjustments ensure the unit is turned off and unplugged, and the blades are stationary.

9) Activating the Oscillation

1. Align the Oscillation Bar (6) and Locking Knob (7) with the outer screw hole in the Oscillation Cam Block (5) (Fig. 6a).
2. Tighten the Locking Knob (7) in a clockwise position.

10) Deactivating the Oscillation

1. Unscrew the Locking Knob (7).
2. Align the Oscillation Bar (5) and locking knob with the centre screw hole in the Oscillation Cam Block (5) (Fig. 6b).
3. Tighten the Locking Knob (7) in a clockwise direction.
4. Tighten the grub screw in the Oscillation Cam Block (5).

11) Height Adjustment

Caution: Ensure both the Front and Rear Safety Grill (1 & 2) are assembled prior to making any adjustments.
Caution: Ensure the unit is turned off and unplugged, and the blades are stationary prior to making any adjustments.

1. To adjust the fan height; loosen the locking ring on the Telescopic Stand (8), this will allow you to move the head up and down to the desired height.
2. Once you have the fan at the desired height tighten the locking ring ensuring it is firmly tightened prior to using.
3. Plug the unit back in and turn on to the desired speed.

12) Care & Maintenance

Caution: Prior to cleaning or maintaining the fan ensure the unit is turned off and unplugged, and the blades are stationary.

1. Disconnect the unit from the wall socket prior to cleaning the unit.
2. Clean the fan only with a slightly damp, soapy cloth, but ensure it is not too wet.
   After wiping down the unit with the soapy cloth, dry any wet spots with a dry paper towel or dry clean cloth.
3. **DO NOT** spray or rinse with any form of liquid and/or detergents.
4. Store the fan in a clean dry area when not in use.
5. Ensure you regularly remove built up dust from the Fan Blade (3) and Front & Rear Safety Grill's (1) & (2).

1 YEAR WARRANTY

Warranty

Warranty given by Kincrome Australia Pty Ltd of 3 Lakeview Drive, Caribbean Park, Scoresby, Victoria (Tel 1300 657 528). The applicable warranty period (12 months) commences on the date that the product is purchased. If this product has materials or workmanship defects (other than defects caused by abnormal or non warranted use) you can, at your cost, send the product to place of purchase, an authorised Kincrome service agent or one of Kincromes addresses for repair or replacement. Your rights under this warranty are in addition to any other rights you have under the Australian Consumer Law or other applicable laws. Our goods come with guarantees that cannot be excluded under the Australian Consumer Law. You are entitled to a replacement or refund for a major failure and compensation for any other reasonably foreseeable loss or damage. You are also entitled to have the goods repaired or replaced if the goods fail to be of acceptable quality and the failure does not amount to a major failure. For further details please visit www.kincrome.com.au or call us. Due to minor changes in design or manufacture, the product you purchase may sometimes differ from the one shown on the packaging.

NOTE:

KINCROME

www.kincrome.com.au