KINCROME BLUE STEEL

Side Locker - 3 Tier

Operation Manual

K77923

IMPORTANT: THIS OPERATING MANUAL CONTAINS IMPORTANT SAFETY INFORMATION, READ CAREFULLY & UNDERSTAND ALL INFORMATION BEFORE OPERATING. SAVE THIS MANUAL FOR FUTURE USE





Specifications

Shelf Load Capacity	15kg
Net Weight	19.9kg
Material	Heavy Gauge Steel
Measurements	L 258 x W 461 x H 830mm

Parts List


6 X HEX BOLTS


6 X WASHERS

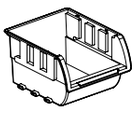
6 X TUBS

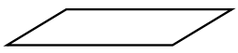
4 X EVA MAT

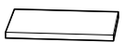
4 X ADHESIVE EVA PROTECTORS


2 X KEYS

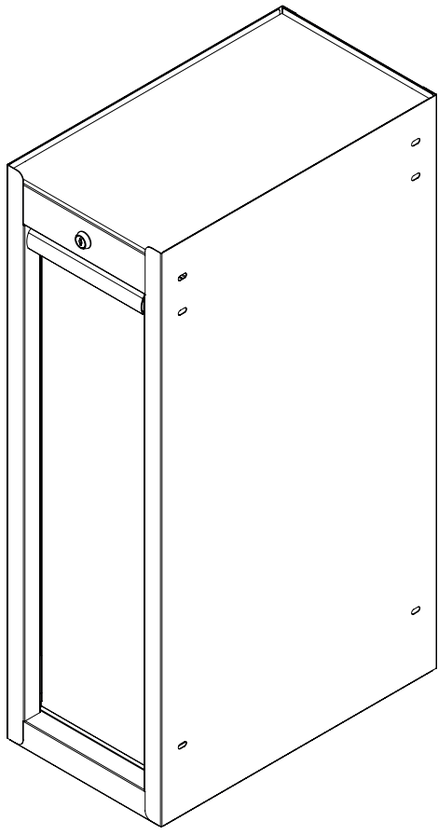

Additional Parts List

(if adding further accessories)
> 6 x hex bolts
> 12 x washers
> 6 x lock nuts

Maintenance

> Periodically tighten all hardware
> Lubricate the lock with graphite annually
> Use a damp Microfibre cloth to clean all surfaces

KINCROME BLUE STEEL

Side Locker - 3 Tier

Operation Manual

K77923

Assembly Instructions

STEP 1:
The Bluesteel Side locker can be installed on either side of a Kincrome Bluesteel trolley or compatible accessory.
Once you have determined your preferred position, install the 4 x Adhesive EVA protectors on the side of the side locker that will sit against the trolley or accessory.

STEP 2:
Follow the instructions below under "How to Remove & Reinsert Drawers" and remove the drawer from the side locker and set aside.

STEP 3:
With assistance, carefully lift into position. While holding in place, from inside the side locker use the 6 x provided hex bolts and wahsers to fasten securely.

STEP 4:
Follow the instructions below under "How to Remove & Reinsert Drawers" and Reinsert the side locker drawer.

1

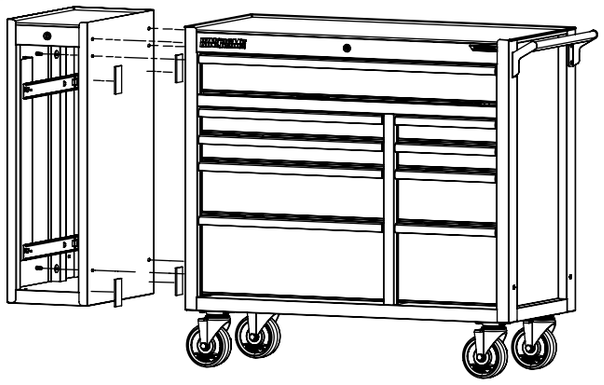

3

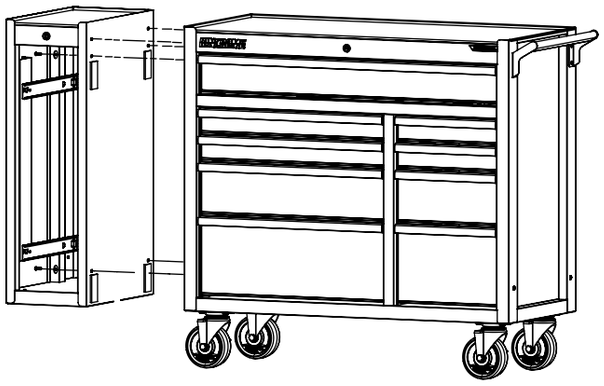

4

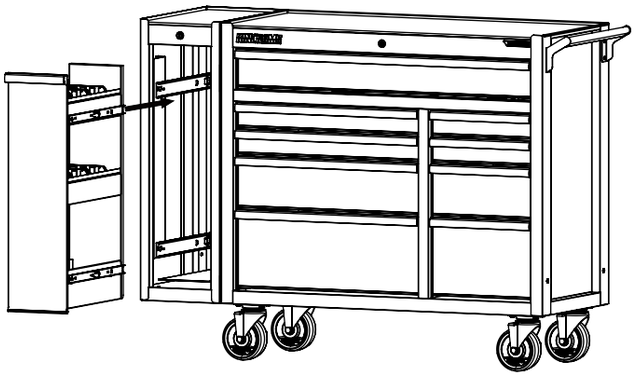

How to Remove & Reinsert Drawers

REMOVING THE DRAWERS
- Fully extend the empty drawer.
- Push up the right release lever while pushing down the left release lever.
- Pull the drawer outward until it is released from the drawer slide.

RE-INSERTING THE DRAWERS
- Extend the drawer slides.
- Insert the brackets on each side of the drawer into the slots on the slides, being careful that they are properly positioned.
- Once properly inserted, completely close the drawer to set the slides in their proper positions.

Note: If drawer does not slide in smoothly Do Not force. Remove and reinstall drawer.

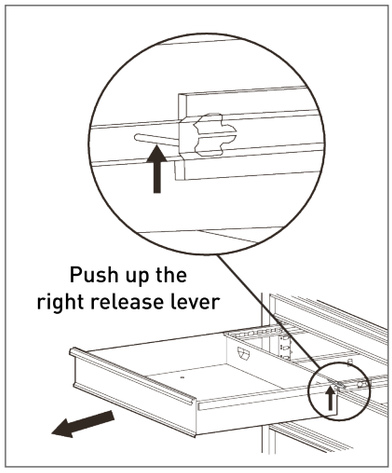

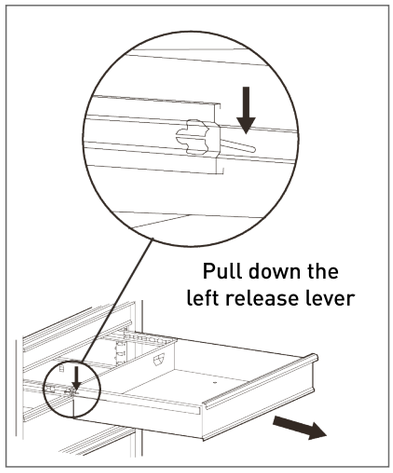



Universal Trolley Mount
K77929

NOTE: This product can also be fitted to older BLUESTEEL Trolley models K7787, K7849 & K7899 with the addition of the K77929 Universal Trolley Mount sold separately.

Scan for more product information

KINCROME BLUE STEEL

Side Locker - 3 Tier

Operation Manual

K77923

Spare Parts

Ref	Part Number	QTY	Description
1	K7786-1	1	LOCK & KEY
2	K7888	1	KEY ONLY (SPECIFY KEY NUMBER)
3	K77923-2	2	BALL BEARING SLIDES (PAIR)

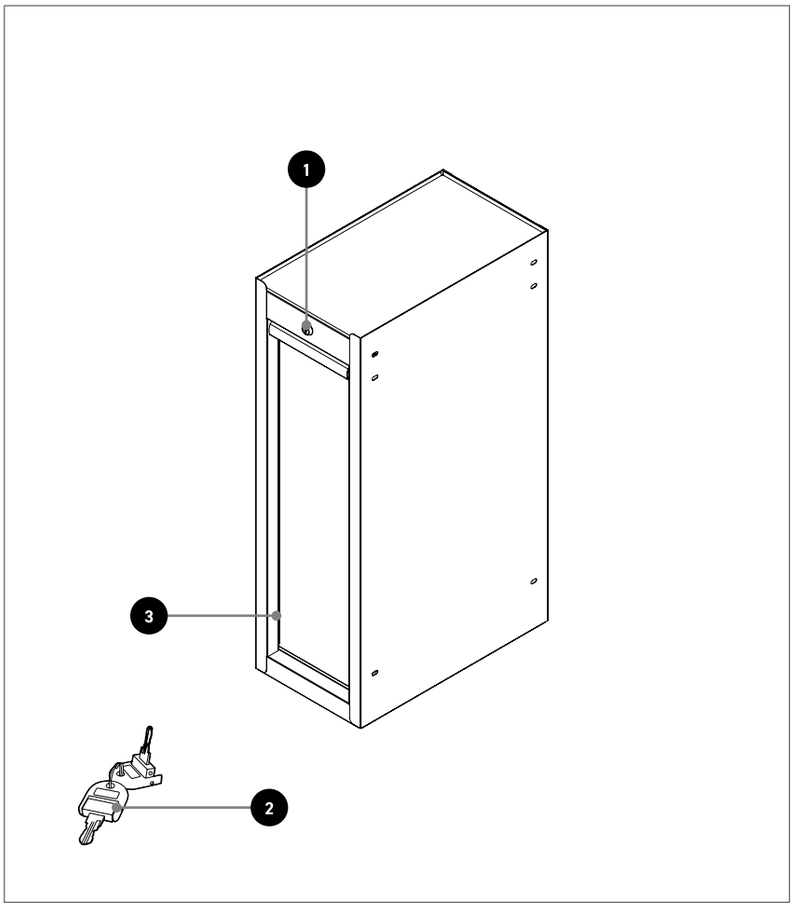

OFFICE CONTACT DETAILS

Phone: 1300 657 528 Email: enquiries@kincrome.com.au Website: www.kincrome.com.au

WARRANTY

2 YEAR WARRANTY

Our goods and services come with guarantees that cannot be excluded under the Australian Consumer Law. For major failures with the service, you are entitled: -to cancel your service contract with us; and -to a refund for the unused portion, or to compensation for its reduced value. You are also entitled to choose a refund or replacement for major failures with goods. If a failure with the goods or a service does not amount to a major failure, you are entitled to have the failure rectified in a reasonable time. If this is not done you are entitled to a refund for the goods and to cancel the contract for the service and obtain a refund of any unused portion. You are also entitled to be compensated for any other reasonably foreseeable loss or damage from a failure in the goods or service'. Kincrome Australia Pty Ltd of 3 Lakeview Drive, Caribbean Park, Scoresby, Victoria (Tel 1300 657 528) also provides the Kincrome Lifetime Guarantee and 12-Month Warranty (Kincrome Express Warranties) in respect of some of its products. If a product is covered by a Kincrome Express Warranty and it has materials or workmanship defects (other than defects caused by abnormal or non warranted use) which are covered under the terms of the relevant Kincrome Express Warranty, you can, at your cost, send the product to the above address for repair or replacement. Your rights under a Kincrome Express Warranty are in addition to any other rights you have under the Australian Consumer Law or other applicable laws. For further details and terms please check our product guide, visit www.kincrome.com.au or call us. Every effort is made to ensure advertised stock is available, but due to factors beyond the control of Kincrome Australia Pty. Ltd, not all products advertised in this catalogue may be available at all stores. Kincrome Australia Pty. Ltd. reserves the right to correct printing errors. All sizes shown are approximate only. Accessories shown do not come with the product unless otherwise specified. Due to printing process, colours in this catalogue may vary slightly to actual item. E. & O. E.© Copyright 2022. Reproduction in whole or in part is prohibited without written approval.

22 PAP

KINCROME BLUE STEEL

MODULAR STORAGE SYSTEM



BUILD THE ULTIMATE COMBO FOR YOUR SPACE







BLUESTEEL® Range

The Kincrome BLUESTEEL® storage series is available in 26", 41" and 54" sizes, with 15 different models to choose from, ensuring a perfect fit for any professional setting. Crafted for those who demand trade-quality durability in a classic style, this range features heavy-duty castors, seamless drawer operation with automatic retention, and is backed by a robust two-year warranty.

Modular Storage System

Whether you have a compact shed or a spacious workshop, the BLUESTEEL® Modular Storage System adapts effortlessly to your tool storage needs. Our system is designed with versatility in mind, complete with a range of accessories to complement the entire collection. From the casual DIY enthusiast to the seasoned professional, BLUESTEEL® has everything you need to keep your tools organised and accessible. Trust in Bluesteel's robust design to protect and secure your tools, no matter the size of your space.

19 Custom Tool Box Trays

Explore our selection of 19 tailored EVA tool box trays to streamline your tool kit. Designed for optimal organisation and accessibility, our EVA trays allow for quick tool identification, enhancing your efficiency and productivity on every job.

Scan me to see the full range

Available at BUNNINGS warehouse

KINCROME BLUE STEEL

MODULAR STORAGE COMPONENTS – TICKED ITEMS WILL FIT YOUR PURCHASE



Add-On Chest 3 Drawer

680mm (26")

Measurements (L x W x H)	680 x 315 x 282mm
Part No	K77213



Tool Chest 6 Drawer

680mm (26")

Measurements (L x W x H)	680 x 315 x 389mm
Part No	K77216



Tool Chest 7 Drawer

680mm (26")

Measurements (L x W x H)	680 x 461 x 497mm
Part No	K77217



Tool Trolley 7 Drawer

680mm (26")

Measurements (L x W x H)	680 x 461 x 1001mm
Part No	K77227



Chest & Trolley Combo 2 Piece 7 Drawer

680mm (26")

Measurements (L x W x H)	680 x 461 x 1366mm
Part No	K77237



Tool Cart 3 Tier

680mm (26")

Measurements (L x W x H)	680 x 461 x 945mm
Part No	K77243



Hutch

1045mm (41")

Measurements (L x W x H)	1045 x 461 x 497mm
Part No	K77410



Tool Chest 8 Drawer

1045mm (41")

Measurements (L x W x H)	1045 x 461 x 497mm
Part No	K77418



Tool Trolley 9 Drawer

1045mm (41")

Measurements (L x W x H)	1045 x 461 x 1001mm
Part No	K77429



Tool Trolley 9 Drawer

1370mm (54")

Measurements (L x W x H)	1370 x 461 x 1001mm
Part No	K77529



Power Tool Holder

3 Slot

Measurements (L x W x H)	416 x 137 x 120mm
Part No	K77921



Side Locker

2 Shelf

Measurements (L x W x H)	389 x 461 x 830mm
Part No	K77922



Side Locker

3 Tier

Measurements (L x W x H)	258 x 461 x 830mm
Part No	K77923



Side Locker

4 Shelf

Measurements (L x W x H)	500 x 461 x 1489mm
Part No	K77924



Side Storage Rack

3 Tier

Measurements (L x W x H)	461 x 120 x 830mm
Part No	K77925

ALSO AVAILABLE - UNIVERSAL TROLLEY MOUNT - K77929 - ALLOWS FITMENT OF SELECT ACCESSORIES TO SOME OLDER BLUESTEEL TROLLEYS