KINCROME

MANUAL RANGE MULTIMETER

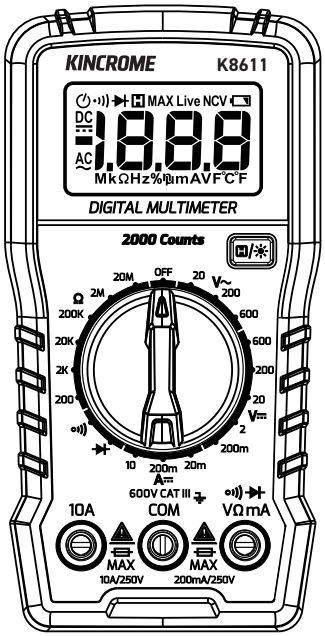

K8611

ED2 Nov 2024

General Safety Warnings

K8611

WARNING This operating manual contains important safety information, read carefully & understand all information before operating. Save this manual for future use.

This Kincrome Digital Multimeter is designed in accordance with IEC61010-1 (Safety Standard promulgated by the International Electro technical Commission). Please read safety precautions before using them.

1. Do not use to measure AC or DC voltages above 600V.
2. When measuring the voltages above 36V DC or 25V AC it is necessary to check whether the probe contacts the test point reliably, connects correctly, and insulates well, so as to avoid electric shock.
3. When changing functions and ranges of the multimeter, remove the probe from the test point.
4. Read this manual to ensure you have chosen the correct range and operation for the test being performed to avoid injury or damage to the device. Although the Digital Multimeter features full range protection, please consider your safety at all times when operating with any voltage.
5. When measuring current, do not input current exceeding 10A.
6. Safety symbols illustration: "⚠" there is dangerous voltage, " ⏚ " electrical grounding, "⧈ " double insulation, "⚠"The operator must refer to the instruction manual, " 🔋 " low device battery.

The Meter measures or tests the following:

AC/DC voltage, DC current, resistance, continuity, diode, capacitance, voltage frequency.
Designed with 1999 counts, it is a tool with excellent performance; the ideal tool for laboratories, commerece and electric industry.

K8611

Symbols

The rating plate on your tool may show symbols. These represent important information about the product or instructions on its use.

V	Volts		Class II Tool, Double Insulated
	Direct Current		Fuse
	Alternating Current	CE	Conforms to European Union directives
	Direct Current and Alternating Current		Read the instruction manual before use. Failure to follow the warnings and instructions may result in electric shock, fire and/or serious injury.
	WARNING!		Battery (Low battery when shown on display)
	Hight Voltage, Risk of electric shock		Symbol for Diode
	Earth		Symbol for Capacitance
Ω	Resistance/ohms		Buzzer / Audible tone
µ	Symbol for the scientific prefix micro-, which indicates one millionth of a unit of measure. (10^{-6} or 0.000001)	COM	Common (return) terminal for all measurements/ Negative/ Black
m	Symbol for the scientific prefix milli-, which indicates one thousandth of a unit of measure. (10^{-3} or 0.001)		Back light
n	Symbol for the scientific prefix nano-, which indicates one billionth of a unit of measure. (10^{-9} or 0.000000001)	H	DATA Hold
k	Symbol for the scientific prefix kilo-, which indicates one thousand of a unit of measure. (10^{3} or 1000)		
M	Mega is a unit prefix in metric systems of units denoting a factor of one million (10^{6} or 1000000)		

General Safety Instructions

K8611

a) **Use the Meter only as specified in this manual,** or the protection provided by the Meter might be impaired.
b) **Do not use the Meter in wet environments.**
c) **Inspect the Meter before using it.** Do not use the Meter if it appears damaged.
d) **Inspect the test leads before use.** Do not use them if insulation is damaged or metal is exposed. Check the test leads for continuity. Replace damaged test leads before using the Meter.
e) **Verify the Meter's operation by measuring a known voltage before and after using it.** Do not use the Meter if it operates abnormally. Protection may be impaired. If in doubt, have the Meter serviced.
f) **Whenever it is likely that safety protection has been impaired**, make the Meter inoperative and secure it against any unintended operation.
g) **Have the Meter serviced only by qualified service personnel.**
h) **Do not apply more than the rated voltage, as marked on the Meter,** between the terminals or between any terminal and earth ground.
i) **Remove test leads from the Meter before opening the case.**
j) **Never remove the cover or open the case of the Meter without first removing it from the main power source.**
k) Never operate the Meter with the cover removed or the case open.
l) Use caution when working with voltages above 30 V ac rms, 42 V ac peak, or 42 V dc.
These voltages pose a shock hazard.
m) **Use only the replacement fuses specified by the manual.**
n) **Use the proper terminals, function and range for your measurements.**
o) **Do not operate the Meter around explosive gas, vapor or dust.**
p) **When using probes, keep your fingers behind the finger guards**.
q) **When making electrical connections, connect the common test lead before connecting the live test lead. When disconnecting, disconnect the live test lead before disconnecting the common test lead.**
r) Disconnect circuit power and discharge all high voltage capacitors before testing resistance, continuity, diodes, or capacitance.
s) **Before measuring current, check the Meter's fuses and turn OFF power** to the circuit before connecting the Meter to the circuit
t) **When servicing the Meter,** use only specified replacement parts.

1) Work Area

a. **Keep the work area clean and well lit.** Cluttered benches and dark areas increase the risks of electric shock, fire, and injury to persons.
b. **Keep bystanders, children, and visitors away while operating the tool.** Distractions are able to result in the loss of control of the tool.
c. **Keep children and bystanders away while operating any powered products.** Distractions may result in electrical shock.

2) Personal Safety

a. **Stay alert. Watch what you are doing and use common sense when operating the tool.** Do not use the tool while tired or under the influence of drugs, alcohol, or medication. A moment of inattention while operating the tool increases the risk of injury to persons.
b. **Dress properly. Do not wear loose clothing or jewellery.** Contain long hair. Keep hair, clothing, and jewellery away from live parts.
c. **Do not overreach. Keep proper footing and balance at all times**. Proper footing and balance enables better control of the tool in unexpected situations.
d. **Always wear eye protection.** Wear approved safety eye protection.

3) Service

a. **Tool service must be performed only by qualified repair personnel.**
b. **When servicing a tool, use only identical replacement parts. Use only authorized part**s.

Know Your Product

K8611

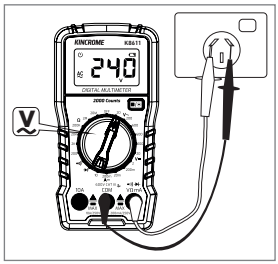

8 - TEST LEADS

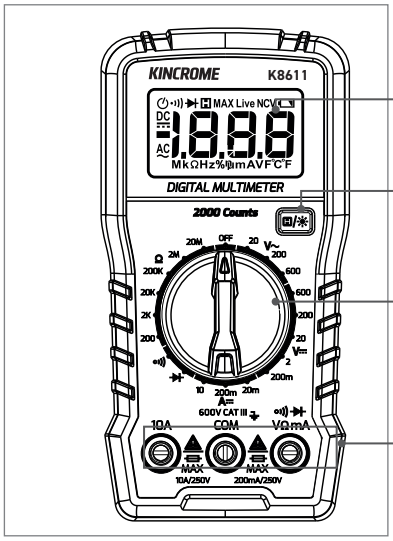

3 - LCD DISPLAY

4 - HOLD DATA / BACK LIGHT ON/OFF

6 - ROTARY DIAL / FUNCTION SELECT

7 - METER TERMINALS

LCD Display features

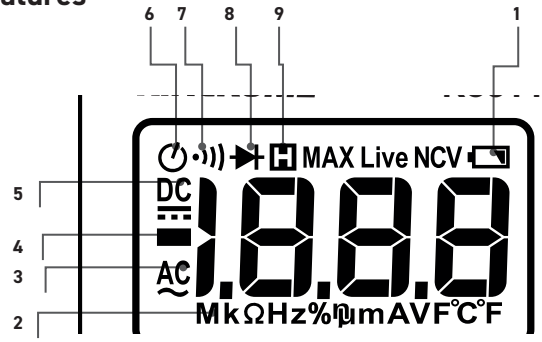

No.	Symbol	Meaning
1		Low battery warning. Replace battery
2	nμF mV V μA mA kMΩ Hz	Measurement units
3	AC	Alternating current
4	DC	Direct current

No.	Symbol	Meaning
5	—	Negative readings
6		The Meter function is set to Auto shut down enabled
7		The Meter function is set to Continuity
8		The Meter function is set to Diode Test
9	H	Display hold enabled. Display freezes present reading

Know Your Product (cont)

K8611

METER TERMINALS

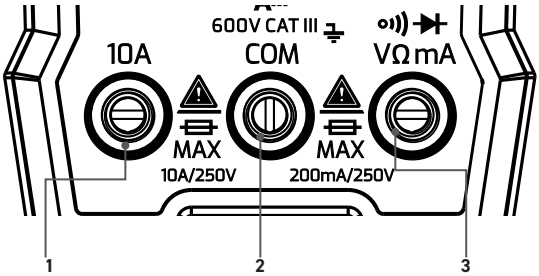

No.	Meaning
1	Input terminal for measuring ac and dc current to 10 A.
2	Common (return) terminal for all measurements.
3	Input terminal for measuring voltage, continuity, resistance, capacitance, frequency and testing diodes.

WARNING!
When connecting the test leads to the circuit or device, connect the common (COM) test lead before connecting the live lead; when removing the test leads, remove the live lead before removing the common test lead.

WARNING
To avoid electric shock, injury, or damage to the Meter, disconnect circuit power and discharge all high-voltage capacitors before testing resistance, continuity, diodes, or capacitance.

Specifications

DC voltage	0.1mV~600V
	±(1.0%+5)
AC voltage	0.01mV~600V
	±(1.0%+5)
DC current	1mA~10A
	±(1.0%+5)
Resistance measurement	0.1Ω~20MΩ
	±(1.28%+5)
Maximum display	4 digitis, max1999
Sampling rate	Approx. 3 per sec
Display size	38x21mm

Product power supply	Two 1.5V AAA batteries
Working temperature	0°C to 40°C 80%RH Indoor Altitude <2000m
Storage temperature	-10°C to 60°C ; Max 70%RH (battery removed)
Test Leads	1KV CATIII 600V IV (Max. 10A)
Product net weight	About 200g (including battery)
Battery Type	2 x AAA 1.5V
Automatic Shutdown	15 mins

Accuracy: (reading a%+the lowest effective digit) to ensure the accuracy of environmental temperature: (23±5)°C, relative humidity less than 75%, the calibration guarantee period is one year from the manufacture date.

Trouble Shooting

K8611

If your instrument does not work properly, the following methods can help you quickly solve general problems, if the failure is still not eliminated, please contact Kincrome Customer Service.

Symptom	Remedy
Display not working	Battery polarity reversed
	Battery not connected
	Battery is flat, replace batteries
	Meter in sleep mode, turn the rotary dial to the off position and then back to the required function
Low battery symbol display	Battery is flat, replace batteries
Current not displayed	Fuse has blown, replace fuse
Incorrect Resistance Displayed	Poor connection between test specimen and test prove.

Operation

DATA HOLD MODE

⚠ **WARNING! To avoid electric shock, do not use the data HOLD mode to determine if a circuit is live. Unstable or noisy readings will not be captured.**

In the data HOLD mode, the Meter holds the reading on the display until it detects a new stable reading. Then the Meter beeps, and displays the new reading.

1. To activate the data hold mode quickly, simply press H|☼. Upon activation, you will hear an audible beep, and the LCD display will display a visual H indicator confirming that the data hold mode is now enabled.

2. To resume normal operation, you have two options. Either press H|☼ once more, or turn the rotary dial /function select back to its original position. Either action will restore the device to its regular mode of operation.

DISPLAY BACK LIGHT

Press and hold H|☼ upon activation, you will hear an audible beep, and the LCD display back light will illuminate.

Note: The back light automatically turns off after approx. 30 seconds.

Operation (cont.)

K8611

VDC (⎓) MODE

Range	Accuracy
200mV	± 1.0%reading ± 5digit
2V	
20V	
200V	
600V	
Overload protecton: 600V; Maximum input voltage 600V	

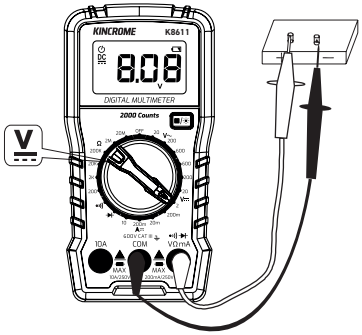

To perform the specific operation, follow these steps:

1. Insert the black leads into the 'COM' jack and the red leads into the VΩmA jack.

2. Adjust the range switch to the appropriate ' V ' range and set the display to DC voltage measurement mode.

Note:

a. Input voltage must not exceed DC600V or AC600V, if exceeded, there is a danger of damaging the instrument circuit.

b. When measuring high voltage circuits, special attention should be paid to avoiding electric shock.

After completing all measurement operations, disconnect the test leads from the circuit under test.

DIODE AND CONTINUITY TEST

Range	Resolution	Accuracy
	The buzzer sounds continuously. The resistance of two points is less than <50Ω.	TOpen circuit voltage registers approximately 2V. Over Load is 250V
	Diode forward voltage drop	Open circuit voltage registers approximately 2V. Over Load is 250V

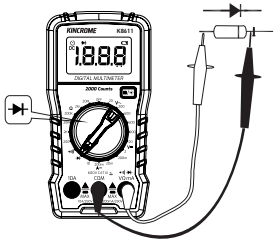

Please follow these specific operations:

1. Insert the black leads into the 'COM' jack and the red leads into the 'VΩmA' jack (note that the red leads is marked as +.

2. Turn the range switch to the ' ' position and connect the leads in parallel to two points of the circuit under test. If the built-in buzzer continuously sounds and the on-off indicator lights up, it indicates that the resistance between the two points is less than 50ohms.

3. Turn the range switch to the ' ' to select the diode measurement mode.

Connect the leads to the diode to be measured. The reading displayed will be the approximate value of the forward voltage drop of the diode, specifically for a silicon PN junction. Typically, a value around 500-800mV is considered normal. If the measured diode is open-circuit or has a reverse polarity, the LCD display will show 'OL'.

RESISTANCE

Range	Resolution	Accuracy
200Ω	0.1Ω	± 1.2% reading ± 5digit
2kΩ	0.001KΩ	
20kΩ	0.012KΩ	
200kΩ	0.1KΩ	
2MΩ	0.001MΩ	
20MΩ	0.01MΩ	
Open circuit voltage: less than 3V; Overload protection: 250V DC or 250V AC RMS.		

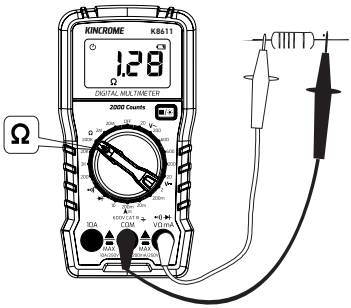

Please follow these specific operations:

1. Insert the black pen into the 'COM' jack and the red pen into the 'VΩmA' jack.

2. Set the range switch to the ' Ω ' position.

3. Connect the pen in parallel to the resistance being measured. Read the measurement results from the display.

Operation (cont.)

K8611

MEASURING CURRENT DC/ ⎓

Range	Resolution	Accuracy
20mA	0.01mA	± 1%reading ± 2digit
200mA	0.1mA	
Maximum Input Current 200mA, 10A; 10A Overload protection Fuse: F200mA/250V & F10A/250V When measuring large current, continous measurements should be no longer than 15 secs.		

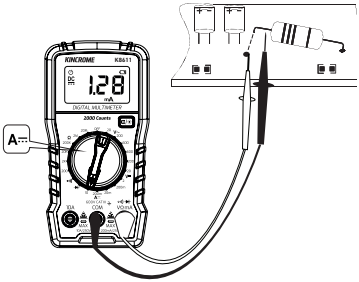

Please follow these specific operations:

Insert the black test leads into the 'COM' jack and the red test leads into the 'VΩmA'.

Turn the rotary dial/function select to the corresponding position. Connect the instrument in series with the circuit to be tested. The measured current value and the current polarity at the red test leads point will be displayed on the screen simultaneously.

Note:

a. Before connecting the instrument in series with the circuit to be tested, make sure to turn off the power supply in the return circuit.

b. The maximum input current is 600 mA (depending on the red test leads's position). Exceeding this current limit will damage the device's fuse. Avoid connecting the test leads in parallel to any circuit while measuring current, as it can damage the fuse and the instrument.

c. After completing all measurement operations, first switch off the power supply of the circuit being tested, and then disconnect the connection between the test pen and the circuit. This step is especially important when measuring large currents.

d. Do not connect more than 36V DC voltage between the current jack and the 'COM' jack.

MEASURING CURRENT 10A DC/ ⎓ 10A

Range	Resolution	Accuracy
10A	0.01A	1%reading ± 5digit

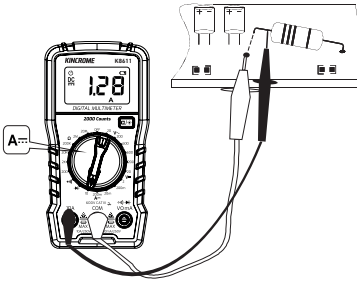

Please follow these specific operations:

1. Insert the black test leads into the 'COM' jack and the red test leads into the '10A Jack'.

2. Set the range switch to the '½' position that corresponds to the desired measurement range, and then connect the instrument in series with the circuit to be tested.

Make sure to turn off the power supply in the circuit before connecting the instrument in series.

Once the instrument is connected, the measured current value and the polarity of the red test leads will be displayed simultaneously on the screen.

Note:

a. Before connecting the instrument in series, always remember to turn off the power supply in the circuit being tested.

b. Avoid exceeding the maximum input current, as it may damage the device's fuse. Ensure the red test leads is inserted in the appropriate location. When measuring current, do not connect the test leads in parallel to any circuit, as it can damage the fuse and the instrument.

c. When the test leads is inserted into the current input port, refrain from connecting the leads needle in parallel to any circuit, as it can damage the fuse and instrument.

d. After completing all measurement operations, turn off the power supply of the circuit under test. Then, disconnect the test leads from the circuit under test. This step is particularly important when measuring large currents.

Maintenance

K8611

e. Make sure not to connect a voltage higher than 36V DC or 25V AC between the current jack and the 'COM' jack.

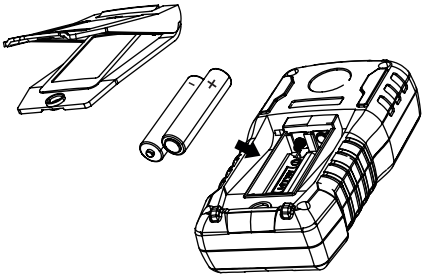

BATTERY REPLACEMENT

1. Turn off the power and remove the test probes
2. Remove the screws that fix the battery cover and remove the battery cover.
3. Remove the old batteries and replace with brand new batteries

Put the battery cover back into it's original position and re fit the screws.

Caution

Avoid electric shock or personal injury replace the batteries immediately when they are low

Do not discharge the battery by short-circuiting or reversing the battery polarity.

When in not use for a long time remove the batteries from the multi meter to prevent battery leakage.

FUSE REPLACEMENT

Fuse rarely needs replacement and is often caused as a result of operators error. To replace the fuses, remove the testing leads from the power source, open the battery cover and replace the damaged one with a new fuse of the specified rating. Reinstall the battery cover and lock the cover.

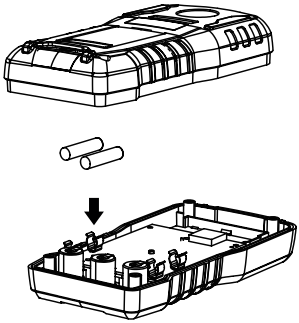

SPARE PARTS

Part No	Description	Quantity
K8611-1	Test Leads	1
K8611-2	Fuse	1
* Please Note: Kincrome reserve the right to change spare parts at any time without notice.		

Operation (cont)

Notes:

K8611

OFFICE CONTACT DETAILS

Phone: 1300 657 528 Email: enquiries@kincrome.com.au Website: www.kincrome.com.au

22 PAP

WARRANTY

1 YEAR WARRANTY

Our goods and services come with guarantees that cannot be excluded under the Australian Consumer Law. For major failures with the service, you are entitled: -to cancel your service contract with us; and -to a refund for the unused portion, or to compensation for its reduced value. You are also entitled to choose a refund or replacement for major failures with goods. If a failure with the goods or a service does not amount to a major failure, you are entitled to have the failure rectified in a reasonable time. If this is not done you are entitled to a refund for the goods and to cancel the contract for the service and obtain a refund of any unused portion. You are also entitled to be compensated for any other reasonably foreseeable loss or damage from a failure in the goods or service'. Kincrome Australia Pty Ltd of 3 Lakeview Drive, Caribbean Park, Scoresby, Victoria (Tel 1300 657 528) also provides the Kincrome Lifetime Guarantee and 12-Month Warranty (Kincrome Express Warranties) in respect of some of its products. If a product is covered by a Kincrome Express Warranty and it has materials or workmanship defects (other than defects caused by abnormal or non warranted use) which are covered under the terms of the relevant Kincrome Express Warranty, you can, at your cost, send the product to the above address for repair or replacement. Your rights under a Kincrome Express Warranty are in addition to any other rights you have under the Australian Consumer Law or other applicable laws. For further details and terms please check our product guide, visit www.kincrome.com.au or call us. Every effort is made to ensure advertised stock is available, but due to factors beyond the control of Kincrome Australia Pty. Ltd, not all products advertised in this catalogue may be available at all stores. Kincrome Australia Pty. Ltd. reserves the right to correct printing errors. All sizes shown are approximate only. Accessories shown do not come with the product unless otherwise specified. Due to printing process, colours in this catalogue may vary slightly to actual item. E. & O. E.© Copyright 2022. Reproduction in whole or in part is prohibited without written approval.