KINCROME PT18

18V Storm Blower

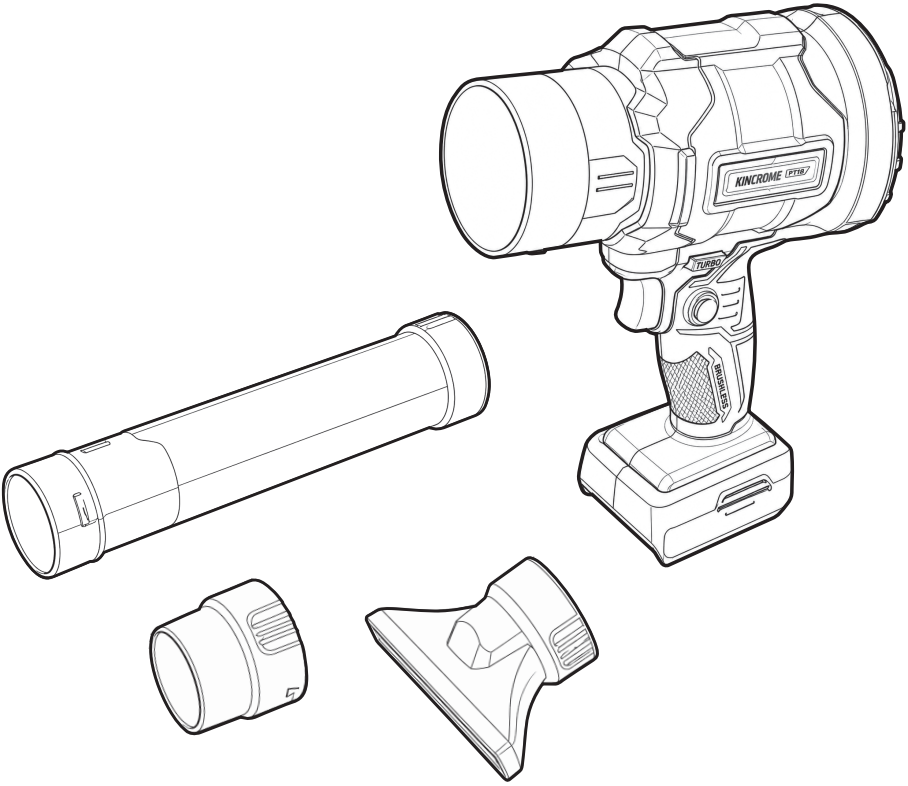

K23034

ED1 JULY 2026

General Power Tool Safety Warnings

K23034

WARNING Read all safety warnings and all instructions. *Failure to follow the warnings and instructions may result in electric shock, fire and/or serious injury.* **Save all warnings and instructions for future reference.** *The term "power tool" in the warnings refers to your mains-operated (corded) power tool or battery-operated (cordless) power tool.*

1) Work area safety

a) **Keep work area clean and well lit.** *Cluttered or dark areas invite accidents.*

b) **Do not operate power tools in explosive atmospheres, such as in the presence of flammable liquids, gases or dust.** *Power tools create sparks which may ignite the dust or fumes.*

c) **Keep children and bystanders away while operating a power tool.** *Distractions can cause you to lose control.*

2) Electrical safety

a) **Power tool plugs must match the outlet. Never modify the plug in any way. Do not use any adapter plugs with earthed (grounded) power tools.** *Unmodified plugs and matching outlets will reduce risk of electric shock.*

b) **Avoid body contact with earthed or grounded surfaces, such as pipes, radiators,ranges and refrigerators.** *There is an increased risk of electric shock if your body is earthed or grounded.*

c) **Do not expose power tools to rain or wet conditions.** *Water entering a power tool will increase the risk of electric shock.*

d) **Do not abuse the cord. Never use the cord for carrying, pulling or unplugging the power tool. Keep cord away from heat, oil, sharp edges or moving parts.** *Damaged or entangled cords increase the risk of electric shock.*

e) **When operating a power tool outdoors, use an extension cord suitable for outdoor use.** *Use of a cord suitable for outdoor use reduces the risk of electric shock.*

f) **If operating a power tool in a damp location is unavoidable, use a residual current device (RCD) protected supply.** *Use of an RCD reduces the risk of electric shock.*

3) Personal safety

a) **Stay alert, watch what you are doing and use common sense when operating a power tool. Do not use a power tool while you are tired or under the influence of drugs, alcohol or medication.** *A moment of inattention while operating power tools may result in serious personal injury.*

b) **Use personal protective equipment. Always wear eye protection.** *Protective equipment such as dust mask, non-skid safety shoes, hard hat, or hearing protection used for appropriate conditions will reduce personal injuries.*

c) **Prevent unintentional starting. Ensure the switch is in the off-position before connecting to power source and/or battery pack, picking up or carrying the tool.** *Carrying power tools with your finger on the switch or energising power tools that have the switch on invites accidents.*

d) **Remove any adjusting key or wrench before turning the power tool on.** *A wrench or a key left attached to a rotating part of the power tool may result in personal injury.*

e) **Do not overreach. Keep proper footing and balance at all times.** *This enables better control of the power tool in unexpected situations.*

f) **Dress properly. Do not wear loose clothing or jewellery. Keep your hair, clothing and gloves away from moving parts.** *Loose clothes, jewellery or long hair can be caught in moving parts.*

g) **If devices are provided for the connection of dust extraction and collection facilities, ensure these are connected and properly used.** *Use of dust collection can reduce dust-related hazards.*

4) Power tool use and care

a) **Do not force the power tool. Use the correct power tool for your application.** *The correct power tool will do the job better and safer at the rate for which it was designed.*

b) **Do not use the power tool if the switch does not turn it on and off.** *Any power tool that cannot be controlled with the switch is dangerous and must be repaired.*

c) **Disconnect the plug from the power source and/or the battery pack from the power tool before making any adjustments, changing accessories, or storing power tools.** *Such preventive safety measures reduce the risk of starting the power tool accidentally.*

d) **Store idle power tools out of the reach of children and do not allow persons unfamiliar with the power tool or these instructions to operate the power tool.** *Power tools are dangerous in the hands of untrained users.*

e) **Maintain power tools. Check for misalignment or binding of moving parts, breakage of parts and any other condition that may affect the power tool's operation. If damaged, have the power tool repaired before use.** *Many accidents are caused by poorly maintained power tools.*

f) **Keep cutting tools sharp and clean.** *Properly maintained cutting tools with sharp cutting edges are less likely to bind and are easier to control.*

g) **Use the power tool, accessories and tool bits etc. in accordance with these instructions, taking into account the working conditions and the work to be performed.** *Use of the power tool for operations different from those intended could result in a hazardous situation.*

5) Battery tool use and care

a) **Recharge only with the charger specified by the manufacturer**. *A charger that is suitable for one type of battery pack may create a risk of fire when used with another battery pack.*

b) **Use power tools only with specifically designated battery packs.** *Use of any other battery packs may create a risk of injury and fire.*

c) **When battery pack is not in use, keep it away from other metal objects, like paper clips, coins, keys, nails, screws or other small metal objects, that can make a connection from one terminal to another**. *Shorting the battery terminals together may cause burns or a fire.*

d) **Under abusive conditions, liquid may be ejected from the battery; avoid contact. If contact accidentally occurs, flush with water. If liquid contacts eyes, additionally seek medical help**. *Liquid ejected from the battery may cause irritation or burns.*

6) Service

a) **Have your power tool serviced by a qualified repair person using only identical replacement parts.** *This will ensure that the safety of the power tool is maintained.*

Blower safety warnings

K23034

a) **Do not use the machine in bad weather conditions, especially when there is a risk of lightning.** *This decreases the risk of being struck by lightning.*

b) **Before use, check the supply cord and any extension cord for signs of damage or aging. Do not touch the cord before disconnecting the supply. Do not use the machine if the cord is damaged or worn.** *A damaged supply cord may result in electric shock, fire and/or serious injury.*

c) **Wear eye protection and ear protection.** *Adequate protective equipment will reduce the risk of personal injury.*

d) **While operating the machine, always wear non-slip and protective footwear. Do not operate the machine when barefoot or wearing open sandals.** *This reduces the risk of injury to the feet.*

e) **Do not wear loose fitting clothing or articles such as scarves, strings, chains, ties, etc., that could get drawn into the air inlets. Tie back or cover long hair to make sure it does not get drawn into the air inlets.** *If any of these items are drawn into the air inlets, it can increase the risk of personal injury.*

f) **Keep bystanders away while operating the machine.** *Thrown debris can increase the risk of personal injury.*

g) **Never point the blower nozzle in the direction of people or pets or in the direction of windows. Use extra caution when blowing debris near solid objects, such as trees, automobiles and walls that can cause debris to ricochet.** *Thrown objects can damage property and increase the risk of personal injury.*

h) **Do not use the machine to blow anything that is burning or smoking, such as cigarettes, matches or hot ashes.** *These ignition sources may increase the risk of fire.*

i) **Do not touch the fan while still in motion. Turn off the machine, wait until the fan stops and unplug the machine, before removing any part that may give access to the fan.** *This reduces the risk of injury from moving parts.*

j) **When clearing jammed material or servicing the machine, make sure the power switch is off and the power cord or battery is disconnected.** *Unexpected actuation of the machine while clearing jammed material or servicing may increase the risk of personal injury.*

k) *Recommendation for the use of a residual current device with a tripping current of 30 mA or less.*

l) *This blower is intended to be used by the operator at ground level and not on ladders or any unstable support.*

Symbols

The rating plate on your tool may show symbols. These represent important information about the product or instructions on its use.

	Direct current, DC		Waste electrical products should not be disposed of with household waste. Please recycle where facilities exist. Check with your Local Authority or retailer for recycling advice.
	Refer to instruction manual/booklet		
	Wear ear and eye protection		General warning
	Regulator compliance mark		Do not use in the rain or leave the blower outdoors while raining.
	Keep bystanders away. Do not operate whilst people especially children or pets are in the area.	L_{WA} 102dB	Sound pressure level

K23034

Know Your Product

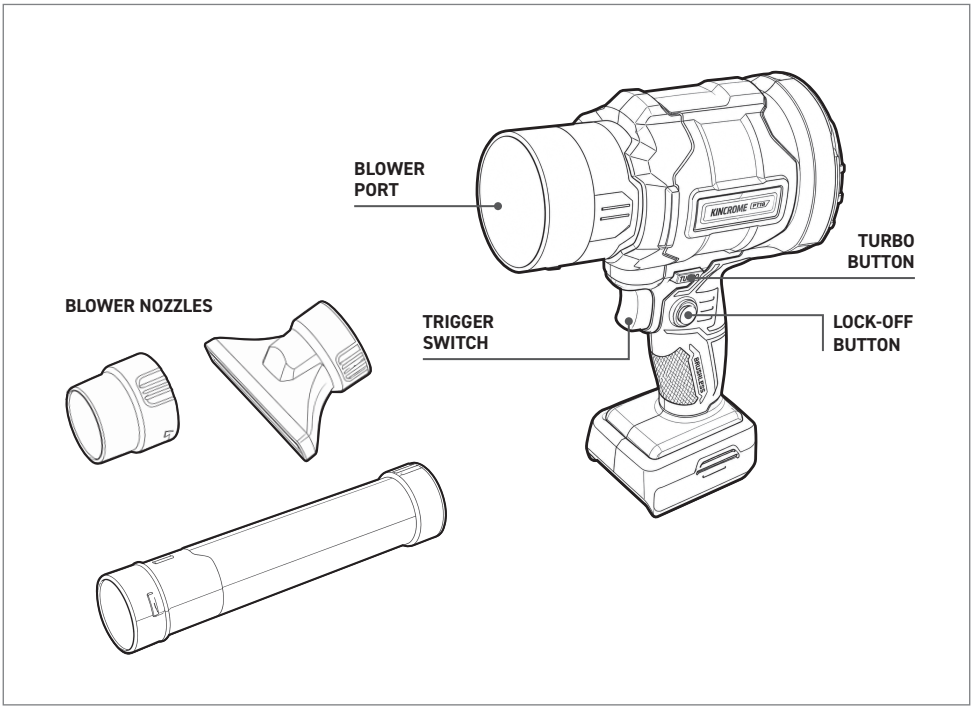

Specifications

Voltage	18VDC
No Load Speed	35,000 min^{-1}
Max. Air Speed	55 m/s
Max. Air Flow	Normal 9.2 m^3/min Turbo mode 11 m^3/min

How To Insert Battery On Tool

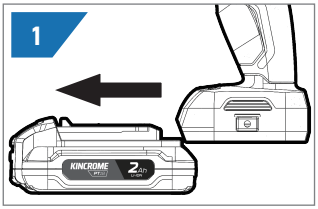

1. ALIGN BATTERY RIBS WITH TOOL.

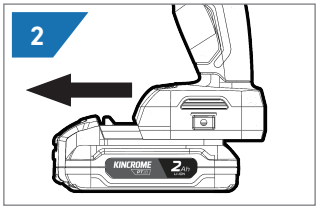

2. SLIDE INTO TOOL.

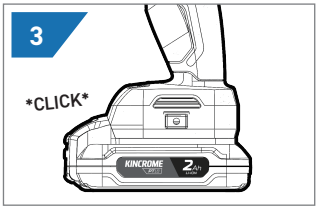

3. STOP WHEN YOU HEAR IT CLICK IN PLACE.

Fitting the Blower Accessories

K23034

WARNING! Do not attempt to operate or disassemble the safety switch by any means other than the normal assembly.

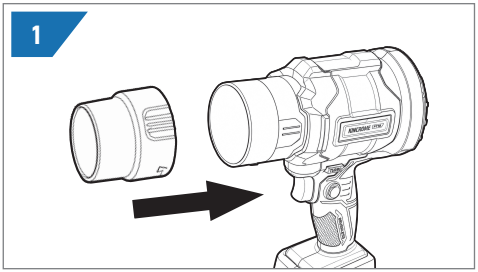

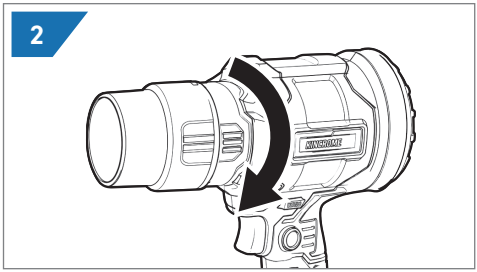

ASSEMBLE THE BLOWER ASSEMBLY

Align the tab located on the blower tube with the corresponding indentation on the blower port or suction port. Push and then rotate the tube until it securely locks into position.

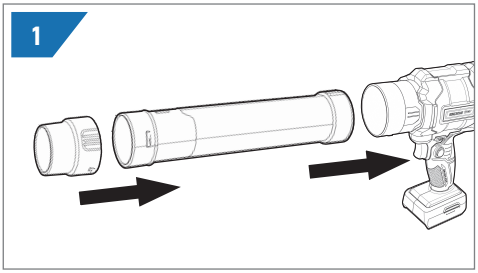

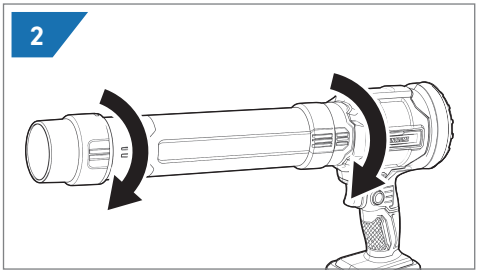

ASSEMBLE THE EXTENSION TUBE

To assemble the extension tube remove the blower tube, then align the tab located on the extension tube with the corresponding indentation on the blower port or suction port. Now the blower tube can be assembled to the extension tube.

Turning On/Off The Blower

K23034

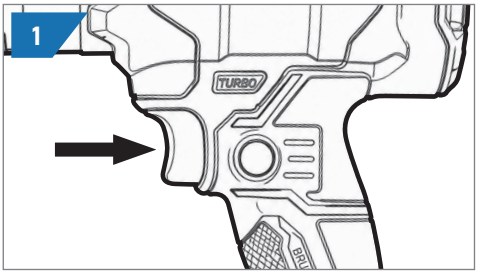

TURN ON

To start the blower, squeeze the trigger switch.

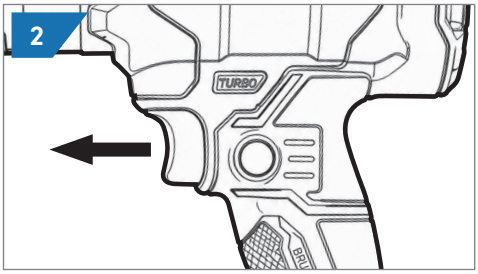

TURN OFF

Release the trigger switch.

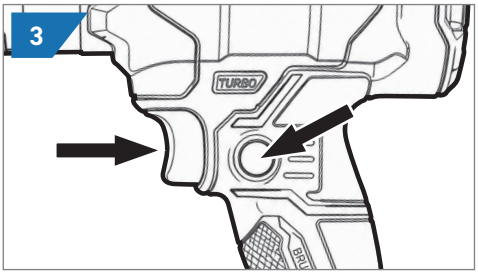

LOCK-ON THE TRIGGER

To start the blower, squeeze the trigger switch and press the lock on button at the same time.

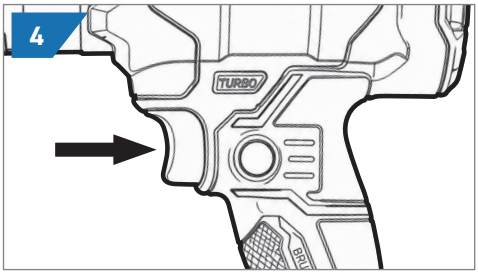

DISENGAGE THE LOCK FEATURE

To stop the blower, press the trigger switch and the self-locking trigger resets.

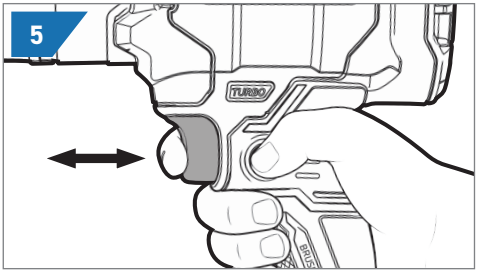

ADJUST THE SPEED

The blower has a variable speed trigger.
To select a speed, squeeze the trigger for the desired speed.

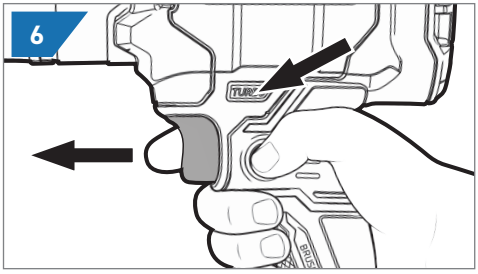

TURBO BUTTON

While the trigger is depressed, press Turbo Boost Button for maximum air speed.
To stop the blower release the trigger.

How To Use the Blower

K23034

CAUTION: Be aware of other people, animals and objects in the area where you are to be operating the blower.

ENSURE SAFETY

Always wear safety glasses when working with the blower. Make sure to secure your hair and any baggy clothes. In appropriate situations make sure you wear ear muffs, a mask or a respiratory mask.

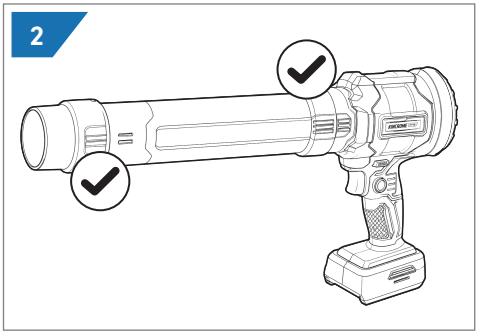

MAKE SURE TUBES ARE CONNECTED

Always ensure the accessories being used, being the blower tube or extension tube is firmly fitted before using the product.

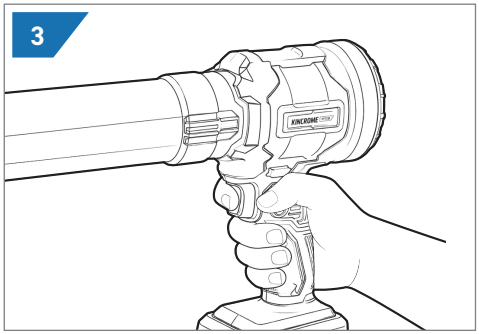

HOLD THE BLOWER FIRMLY

Firmly grasp the blower, depress trigger switch.

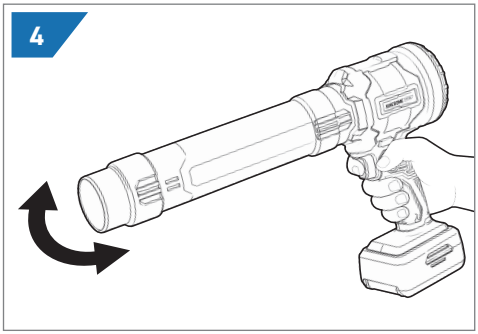

BLOWING DEBRIS

Use swinging motion while walking forward.

Maintenance

This power tool normally requires no maintenance; from time to time the ventilation slots on the motor casing should be cleaned out. If the unit should become defective, repair should be performed by an authorized service agent for electric tools.
Avoid using solvents when cleaning plastic parts. Most plastics are susceptible to damage from various types of commercial solvents and may be damaged by their use. Use clean cloths to remove dirt, dust, oil, grease, etc.

Warning!
Do not at any time let brake fluids, gasoline, petroleum based products, penetrating oils, etc., come in contact with plastic parts. Chemicals can damage, weaken or destroy plastic which may result in serious personal injury.

OFFICE CONTACT DETAILS

Phone: 1300 657 528 Email: enquiries@kincrome.com.au Website: www.kincrome.com.au

22
PAP

WARRANTY

5 YEAR WARRANTY

3 YEAR STANDARD
+2 FURTHER YEARS WHEN
REGISTERED ONLINE

Our goods and services come with guarantees that cannot be excluded under the Australian Consumer Law. For major failures with the service, you are entitled: -to cancel your service contract with us; and -to a refund for the unused portion, or to compensation for its reduced value. You are also entitled to choose a refund or replacement for major failures with goods. If a failure with the goods or a service does not amount to a major failure, you are entitled to have the failure rectified in a reasonable time. If this is not done you are entitled to a refund for the goods and to cancel the contract for the service and obtain a refund of any unused portion. You are also entitled to be compensated for any other reasonably foreseeable loss or damage from a failure in the goods or service. Kincrome Australia Pty Ltd of 3 Lakeview Drive, Caribbean Park, Scoresby, Victoria (Tel 1300 657 528) also provides the Kincrome Limited Lifetime Guarantee, 5 Year Warranty, 5 Year (3+2) warranty, 3 Year Warranty, 2 Year Warranty and 12-Month Warranty (Kincrome Express Warranties) in respect of some of its products. If a product is covered by a Kincrome Express Warranty and it has materials or workmanship defects (other than defects caused by abnormal or non warranted use) which are covered under the terms of the relevant Kincrome Express Warranty, you can, at your cost, send the product to the above address for repair or replacement. Your rights under a Kincrome Express Warranty are in addition to any other rights you have under the Australian Consumer Law or other applicable laws. For further details and terms please check our product guide, visit www.kincrome.com.au or call us. Every effort is made to ensure advertised stock is available, but due to factors beyond the control of Kincrome Australia Pty. Ltd, not all products advertised in this catalogue may be available at all stores. Kincrome Australia Pty. Ltd. reserves the right to correct printing errors. All sizes shown are approximate only. Accessories shown do not come with the product unless otherwise specified. Due to printing process, colours in this catalogue may vary slightly to actual item. E. & O. E.© Copyright 2022. Reproduction in whole or in part is prohibited without written approval.