TOOL TROLLEY
7 DRAWER WIDE BODY
K7799

Operation Manual

Caution: Take Safety Precautions When Using Your Toolbox



⚠ IMPORTANT:

THIS OPERATING MANUAL CONTAINS IMPORTANT SAFETY INFORMATION. READ CAREFULLY AND UNDERSTAND ALL INFORMATION BEFORE OPERATING TOOL. SAVE THIS MANUAL FOR FUTURE USE.

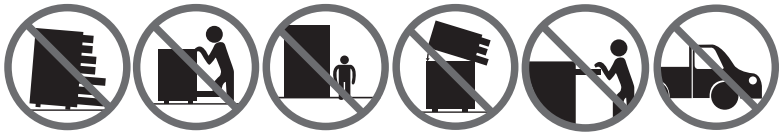

Do not open more than one drawer at a time. | Do not step on drawers. | Do not let children near the Toolbox. | Do not separate Chest from Trolley. | Do not exceed Drawer Load Limit | Not suitable for mounting in Vehicles



Set the brake on the locking castors unless your are moving the Toolbox. | Lock drawers and lid before moving the Toolbox.



Parts List



Suits 8 Drawer Wide Body Chest - K7798

TOOL TROLLEY SPECIFICATIONS

	Width	Depth	Height
Overall	1000mm	465mm	1010mm
Overall (w/out Castors)	1000mm	465mm	850mm
Top Section	910mm	455mm	15mm
Drawers			
Shallow	800mm	395mm	55mm
Deep	800mm	395mm	130mm
Castor Size	125x50mm (5"x2") 2x Locking		
Total Weight	66.0kg		



Non-Locking Swivel Castors (2)



Locking Swivel Castors (2)



Keys x 2

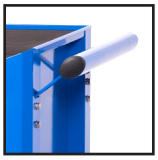

Trolley Handle x 1



16 x 12mm Bolts for Castors



4 x 10mm Bolts for Handle

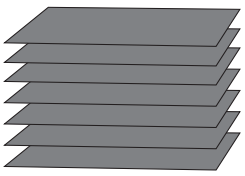

8 x Liners

TOOLS & ASSISTANCE NEEDED



2 People Lift

Castor



or

12mm Spanner or 5mm Hex Key

Handle



10mm Spanner

TOOL TROLLEY
7 DRAWER WIDE BODY
K7799

Assembly Instructions

1 Handle Installing

- Position the trolley side handle behind the holes on the trolley.
- Attach with (4) bolts and washers and tighten with an adjustable wrench.

Note: The side handle can be mounted to either side of the trolley.

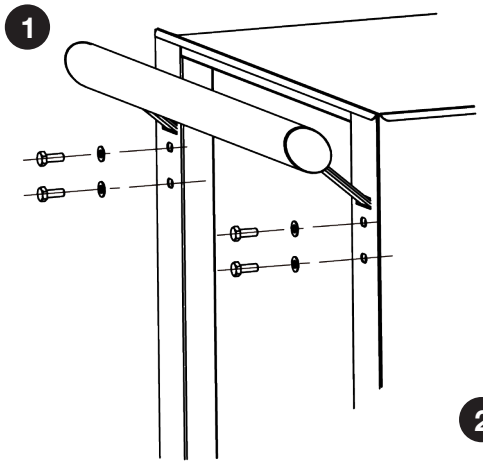

2 Castor Installing (If applicable)

- Be sure the drawers are locked and lay the trolley on its side.
- Secure castors to the unit using the 12mm bolts provided.
- Tighten with a 12mm spanner or 5mm hex key.
- Repeat this process for the castors on the opposite of the trolley.
- Return the trolley to its upright position.

Caution: Do not over tighten the bolts.

Caution: Both locking castors must be fitted to front of trolley.

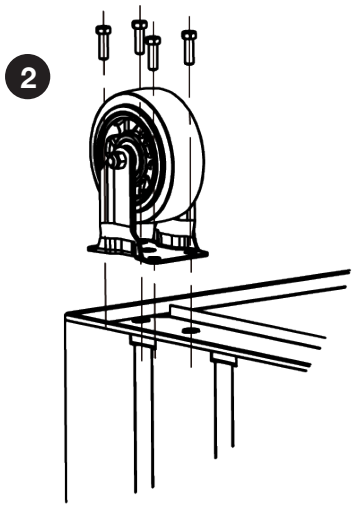

3 Removing the Drawers

- Fully extend the empty drawer.
- Push up the right grey release lever while pushing down the left grey release lever.
- Pull the drawer outward until it is released from the drawer slide.

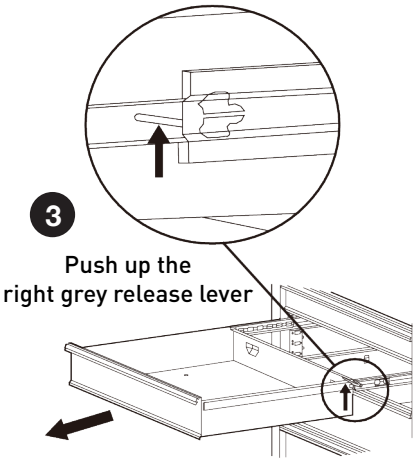

4 Re-Inserting The Drawers

- Extend the drawer slides.
- Insert the brackets on each side of the drawer into the slots on the slides, being careful that they are properly positioned.
- Once properly inserted, completely close the drawer to set the slides in their proper positions.

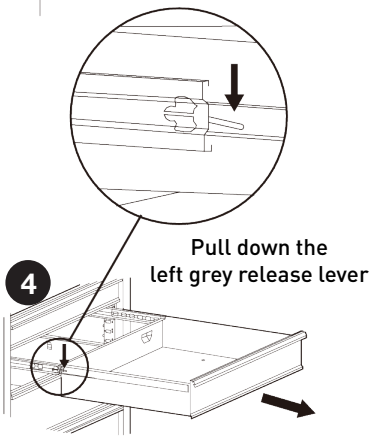

MAINTENANCE

- Periodically tighten all hardware
- Periodically lubricate castors
- Lubricate the slides twice a year
- Lubricate the lock with graphite annually
- Use a damp Microfibre cloth to clean all surfaces

TOOL TROLLEY
7 DRAWER WIDE BODY
K7799

Replacement Parts



ITEM	PART NO.	DESCRIPTION	QUANTITY
1	K7888	Key Only (Specify Key Number) X 1	1
2	K7787-1	Lock & Key	1
3	K7787-3	Trolley Handle	1
4	K7787-4	Ball Bearing Slides (Pair)	7
5	K7799 -1	Drawer Grip (Large)	7
6	K7799-2	EVA Mat Pack 7 Piece	1

ITEM	PART NO.	DESCRIPTION	QUANTITY
7	K7799-3	Large Drawer (Shallow)	5
8	K7799-4	Large Drawer (Deep)	2
9	K7787-12	Castor Swivel X 1	2
10	K7787-10	Castor Swivel X 1 (Brake)	2
11	K7787-11	Castor Bolt Pack	1

KINCROME TOOLS + EQUIPMENT™

National Head Office
National Distribution and Showroom
3 Lakeview Dve, Caribbean Business Park
Scoresby Victoria 3179 Australia
ABN 41 007 185 006

Administration
T +61 3 9730 7100 F + 61 3 9730 7199
E enquiries@kincrome.com.au
W kincrome.com.au

Customer Service Centre
T 1300 657 528 F 1300 556 005

Made to Kincrome Tools & Equipment Pty Ltd Global specifications and quality standards in China

Kincrome UK Ltd PO Box 646 EASTLEIGH SO50

Australia & Global	UK & EU
www.kincrome.com.au	www.kincrome.co.uk
enquiries@kincrome.com.au	enquiries@kincrome.co.uk